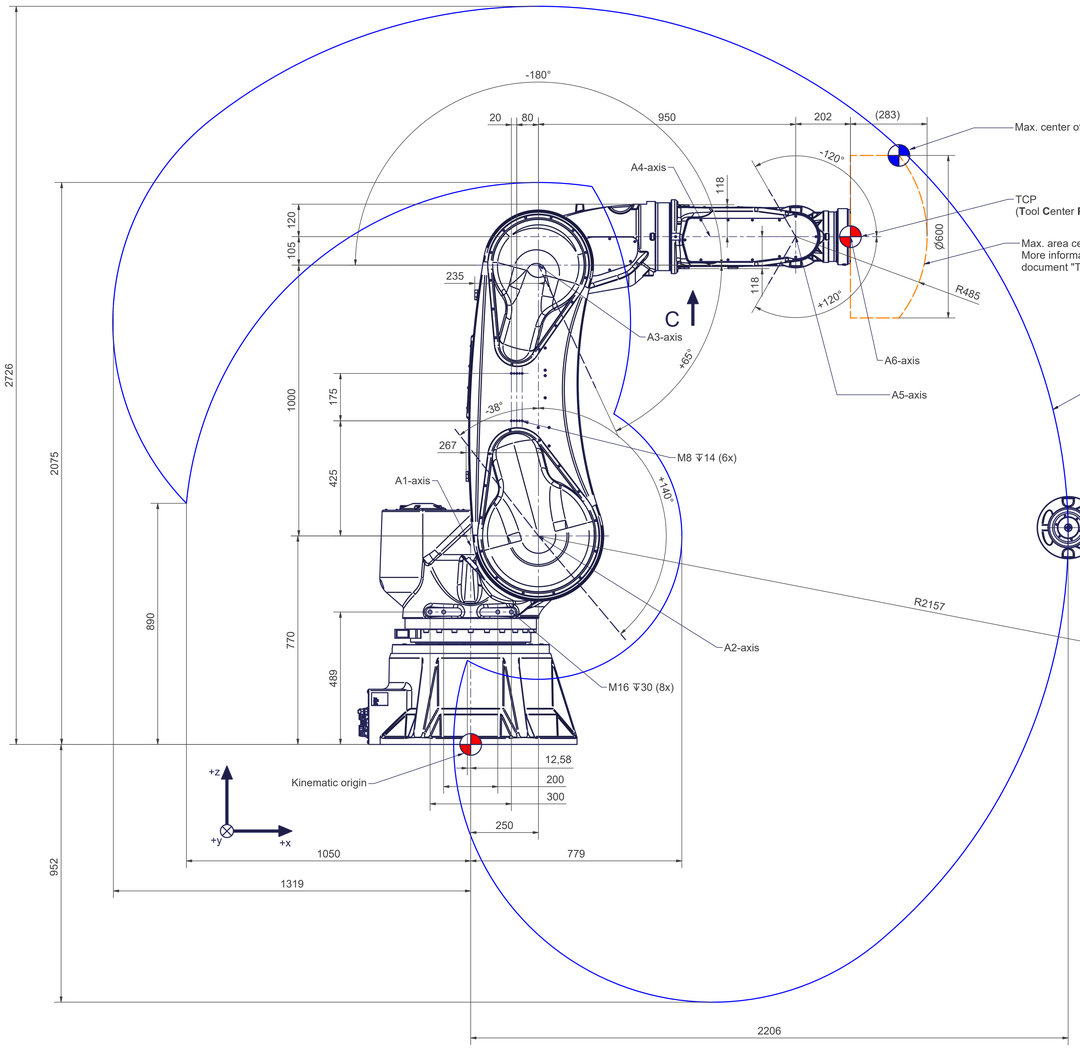

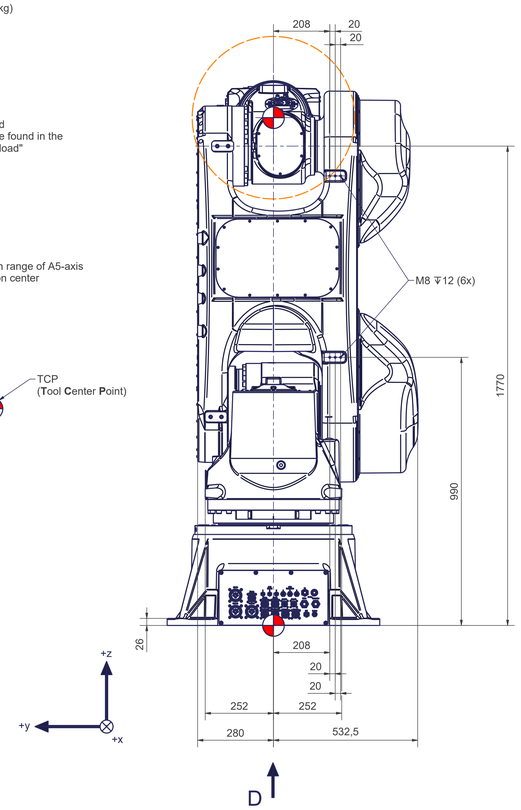

E (1 : 4)

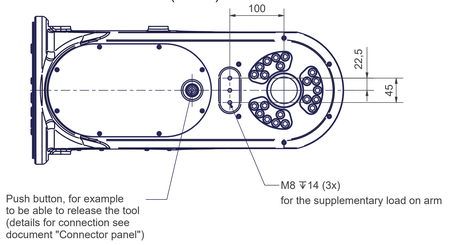

D (1 : 5)
Base frame

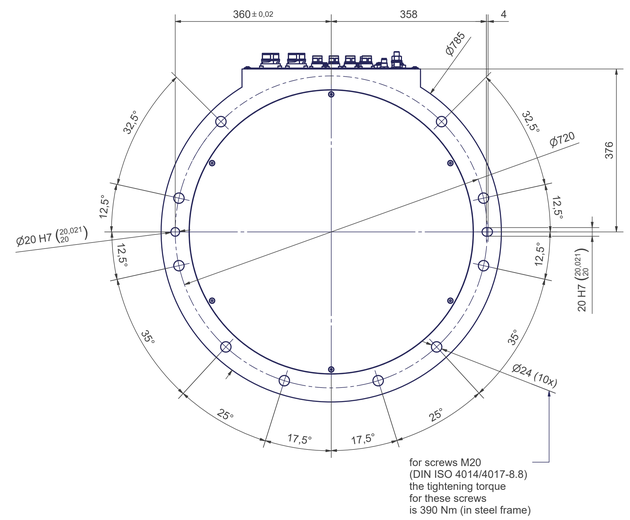

Y (5 : 1)

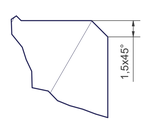

Z (5 : 1)

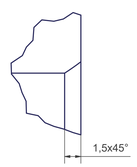

C (1 : 4)

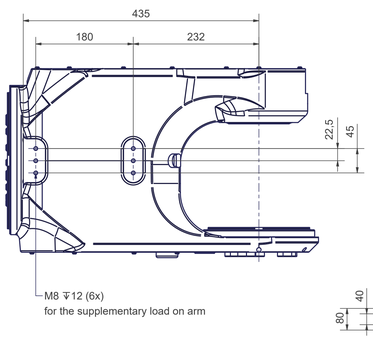

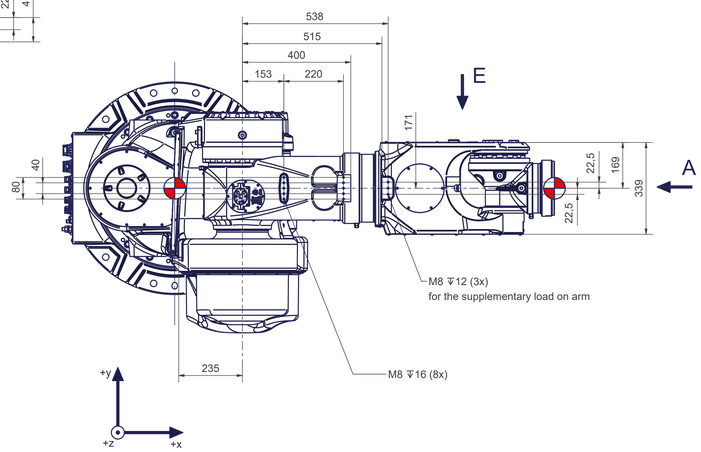

A (1 : 2)
Tool mounting flange A6

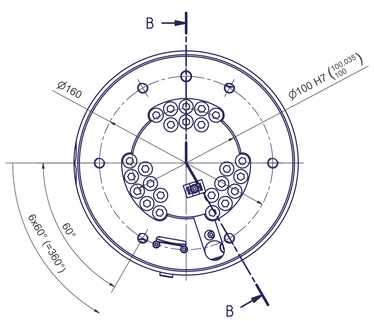

B-B

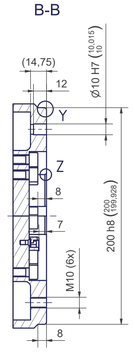

articc.mtr6-2407-100kg	
Axes	6
Payload (on TCP)	100 kg
Supplementary load on arm	50 kg
Reach	2407 mm
Mounting position	Ceiling, Floor

Motion	
Axes	Range fully usable
A1	± 185°
A2	- 38° / + 140°
A3	- 180° / + 65°
A4	± 250°
A5	± 120°
A6	Mechanical endless (*)

(*) Depending on the tool's media supply. We recommend ±185°, as the secondary encoder cable A6 SE01 is routed through the mechanical structure.

Connecting dimensions, valid for article number: AT_00044-SE01

m= kg	A	p= bar
proj. storage surface = m²		V̇= l/min
First angle projection	P= kW	
	U= V / Hz / Ph	
	Imax= A	

autonox Robotics

AT_00044-SE01