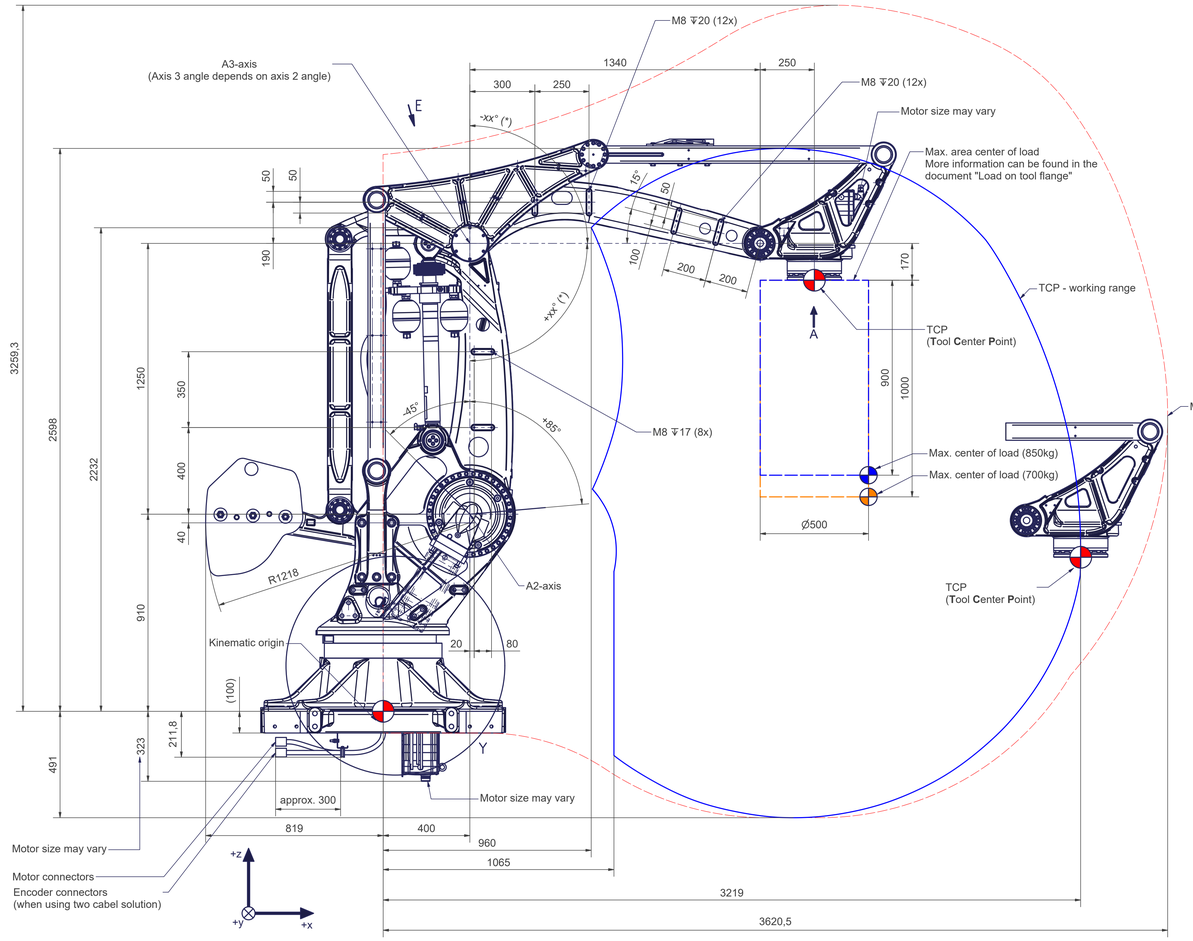

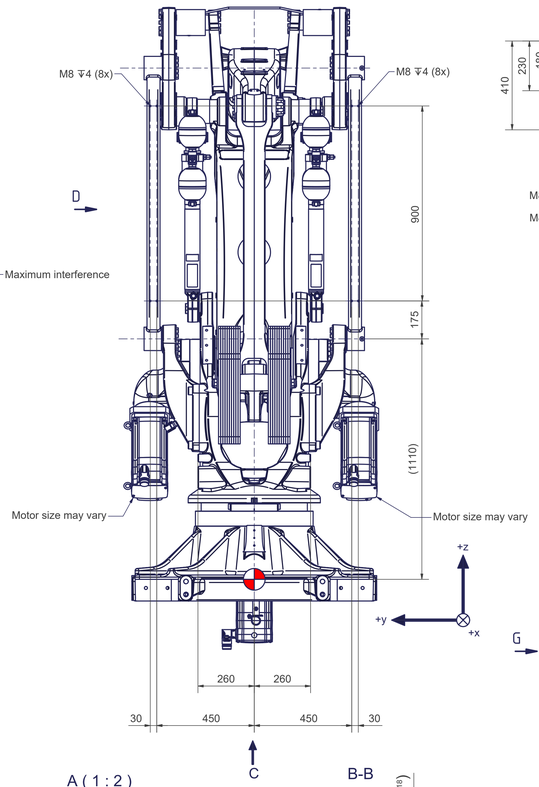

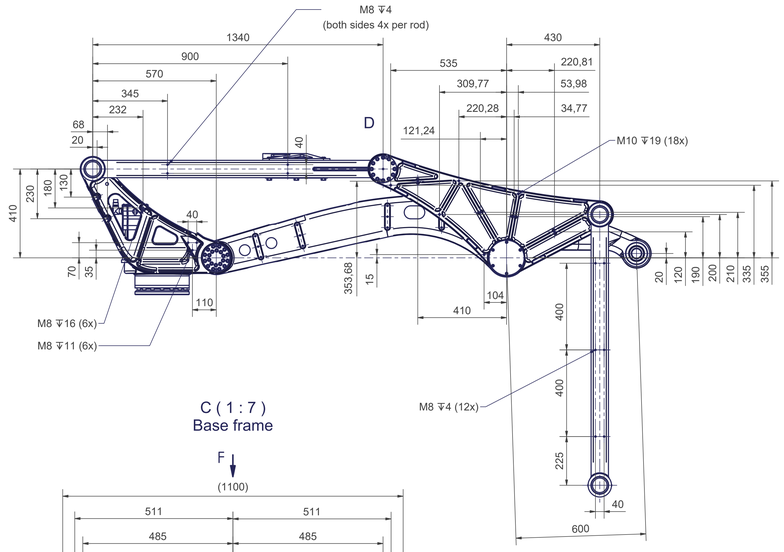

C (1 : 7)
Base frame

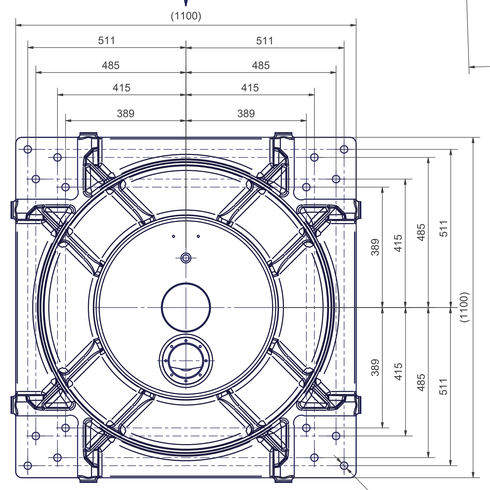

for screws M20 with washer (DIN ISO 4014/4017-8.8) the tightening torque for these screws is 390 Nm (in steel frame)

G (1 : 7)
Base frame

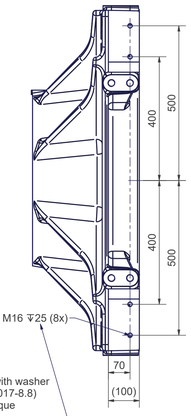

The tightening torque for these screws is 305 Nm

F (1 : 7)
Base frame

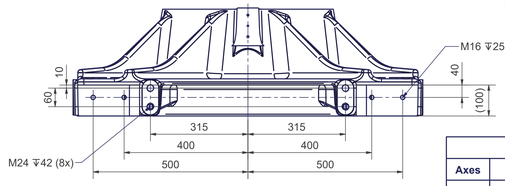

A (1 : 2)
Tool mounting flange A4

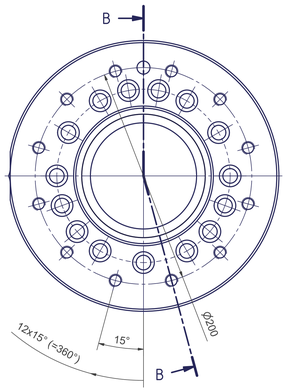

B-B

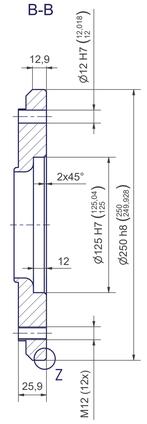

E

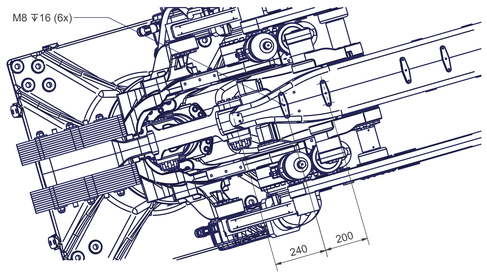

Y (1 : 5)

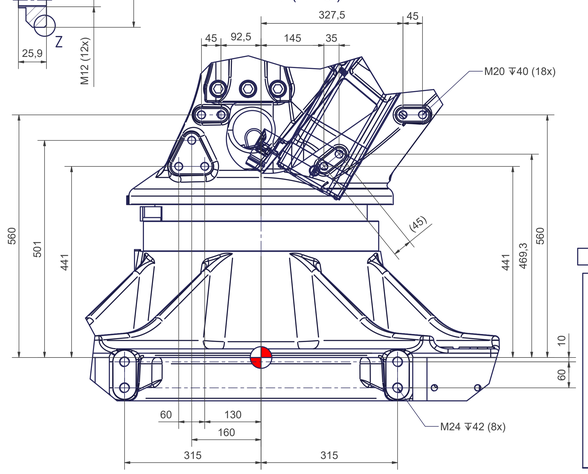

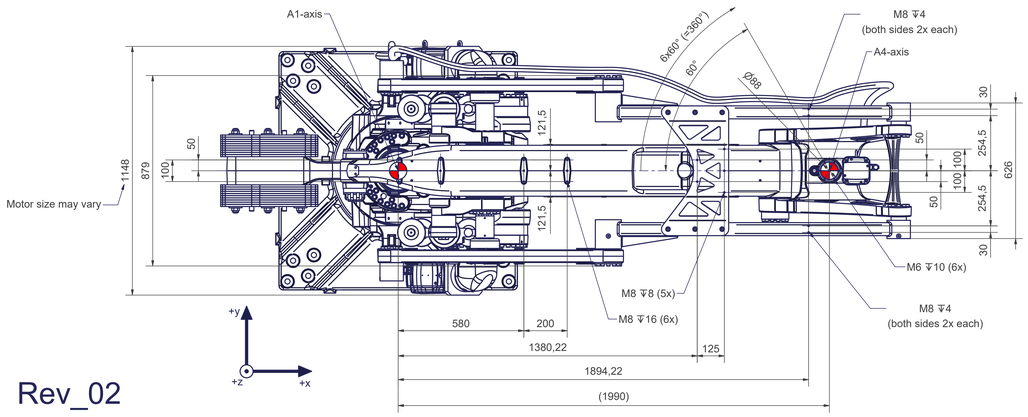

Z (5 : 1)

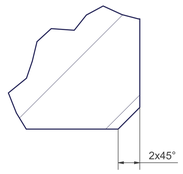

Motion		
Axes	**Range fully usable**	
A1	± 185°	
A2	**Full range**	
	- 45° / + 45°	
	Different cases	
	- 45° / + 48,5°	+ 49,5° / + 85°
A3 (*)	- 27° + angle axis 2 / + 71,5°	- 75,5° / + 71,5°
A4	Mechanical endless (**)	

(*) More information can be found in the document "calibration dimensions"
(**) Control system dependent

artic4-3219-850kg	
Axes	4
Payload (on TCP)	850 kg
Reach	3219 mm
Mounting position	Floor

Connecting dimensions, valid for article number: AT_00019

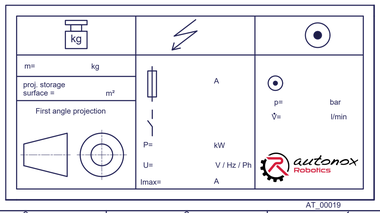

Rev_02

AT_00019