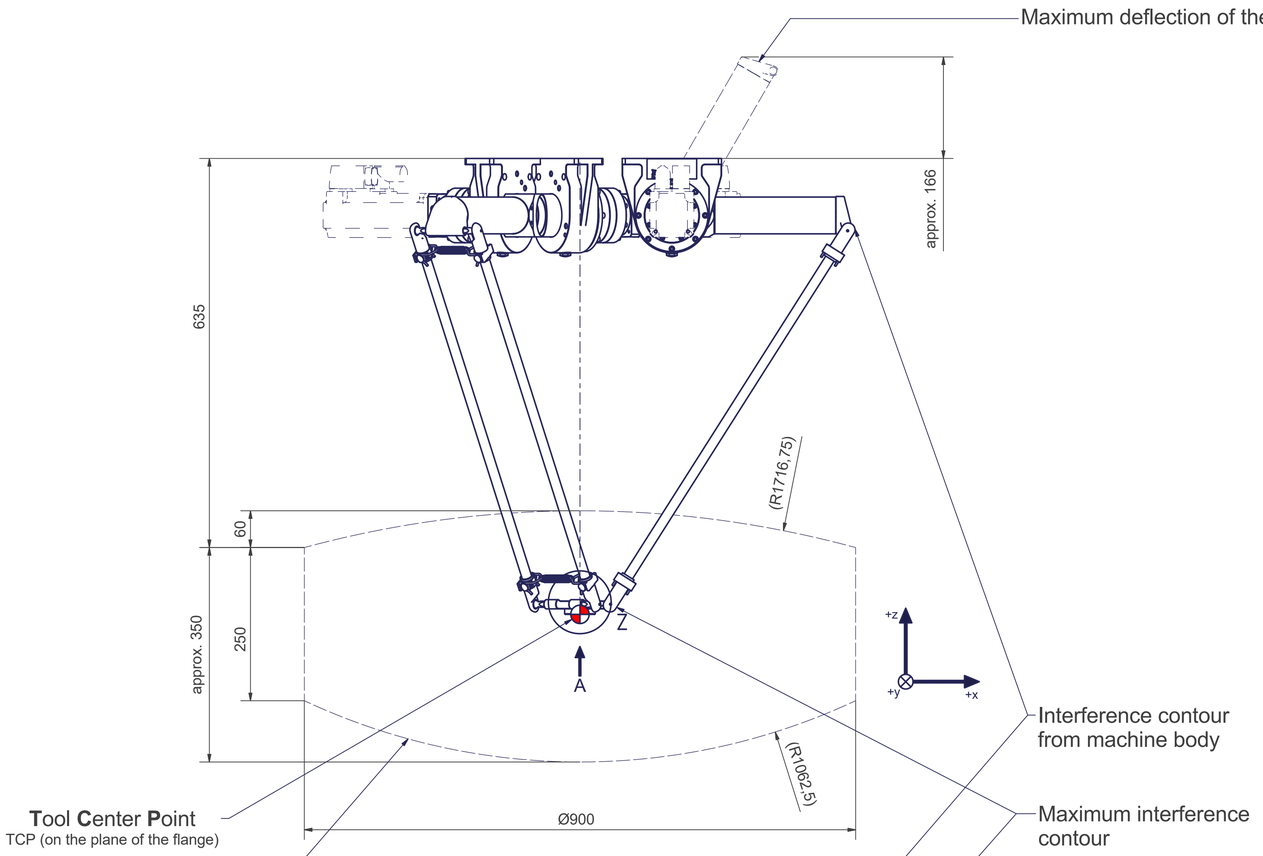

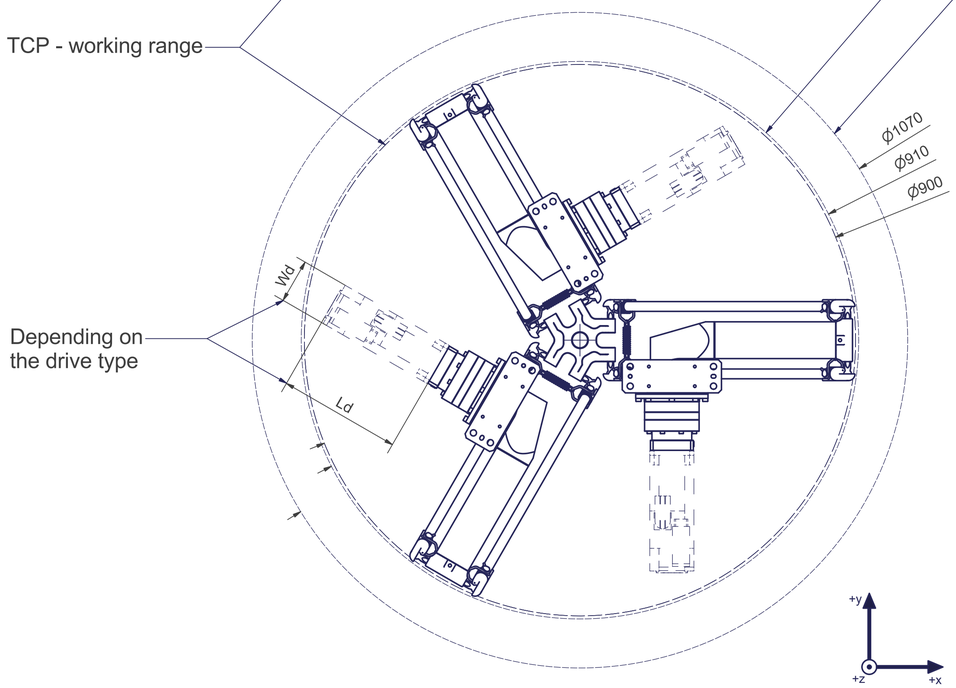

A (2 : 1)

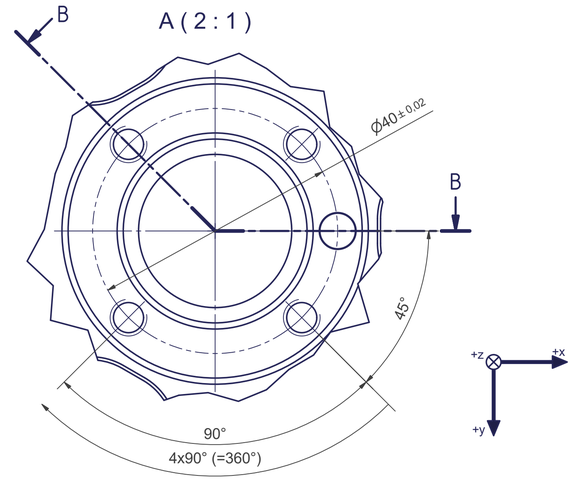

B-B

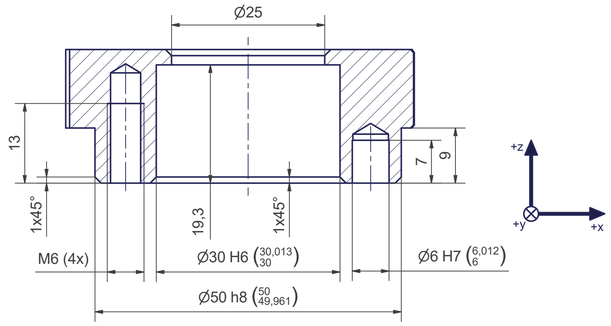

Z (1 : 1)

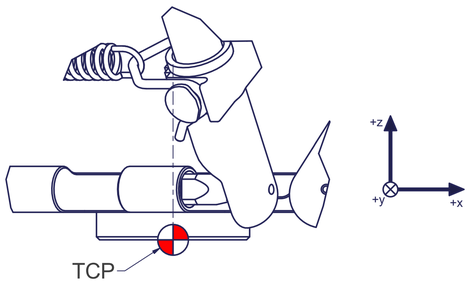

kg		
m= kg	A	
proj. storage surface = m²		p= bar
First angle projection	P= kW	V̂= l/min
	U= V / Hz / Ph	autonox lean line
	Imax= A	

AL_10003

Connecting dimensions,
valid for article number AL_10003

Rev_01

Thread holes for screws M12 are coloured green.
The tightening torque for these screws (strength class 8.8) is 41 Nm.
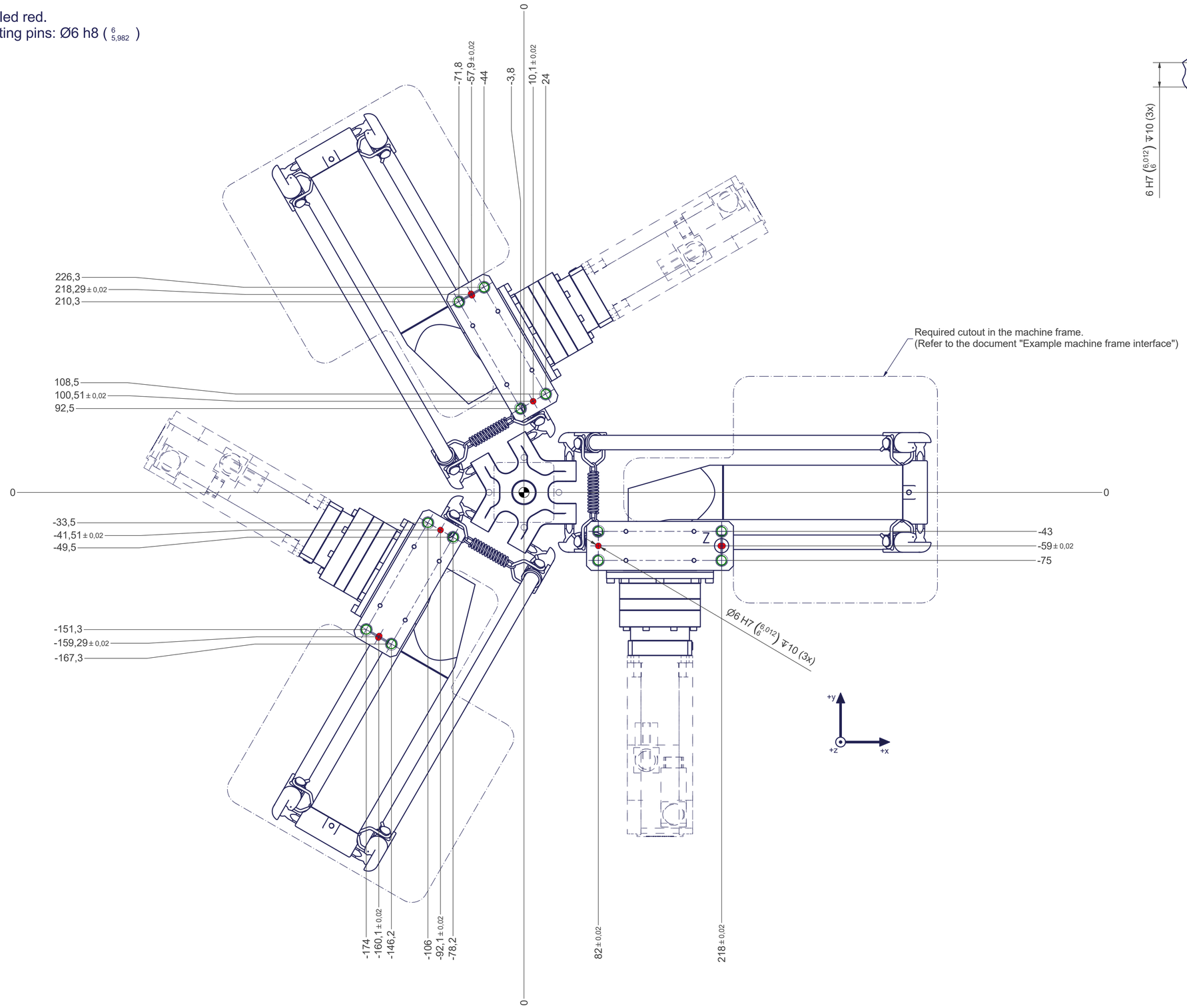
Drilling holes for location pins are filled red.
Recommended dimensions for locating pins: Ø6 h8 ($^{6}_{5,982}$)