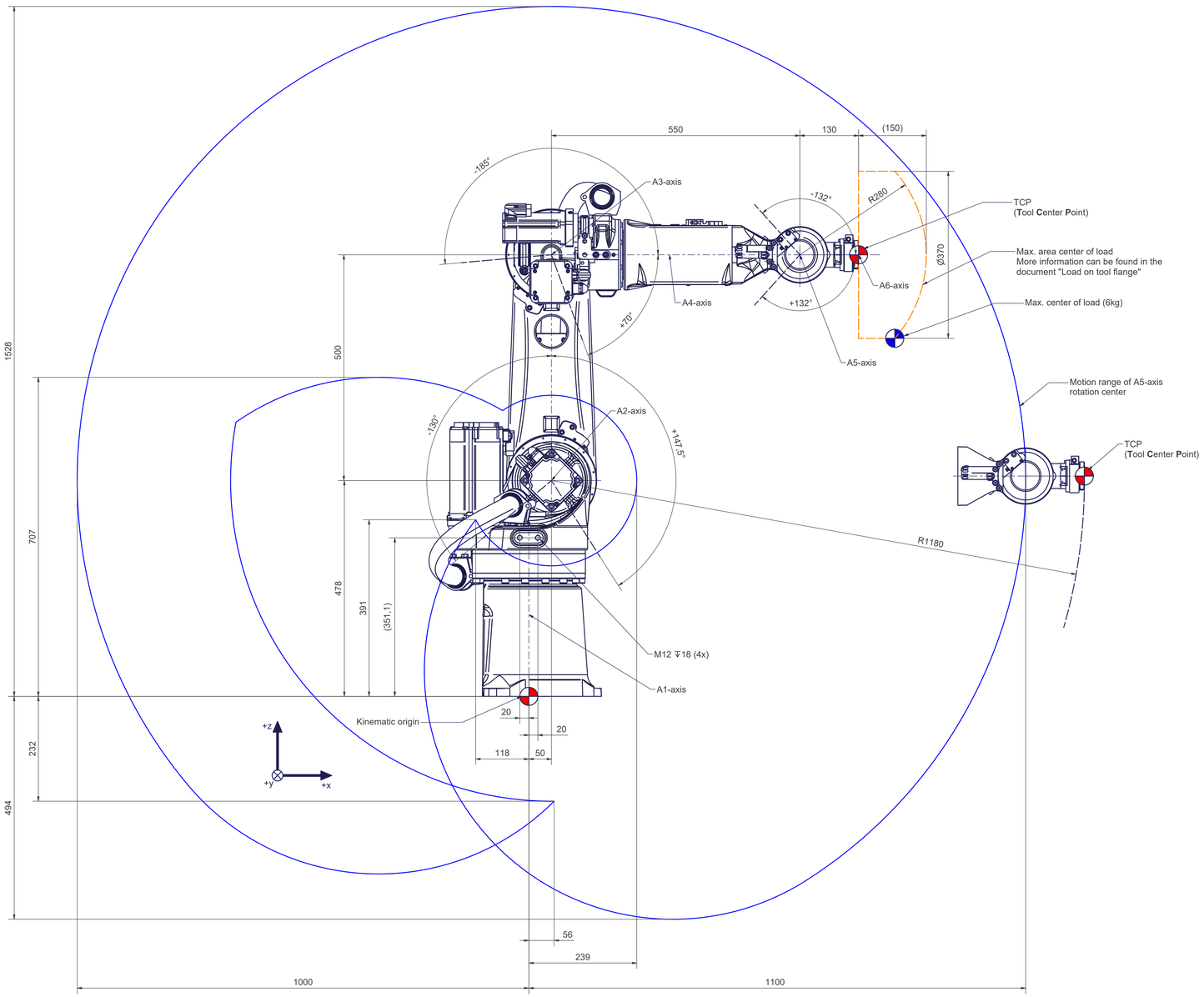

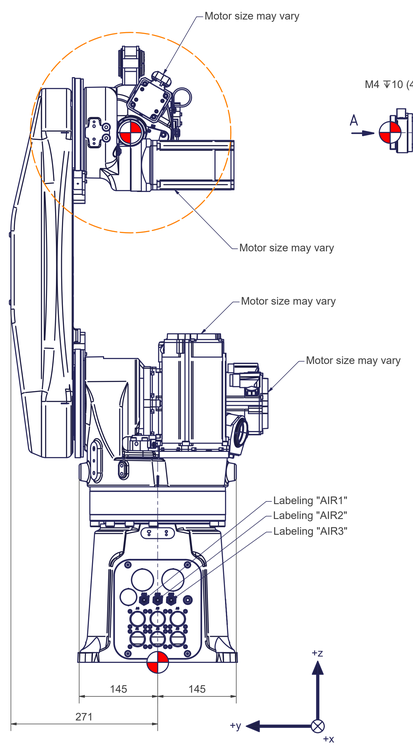

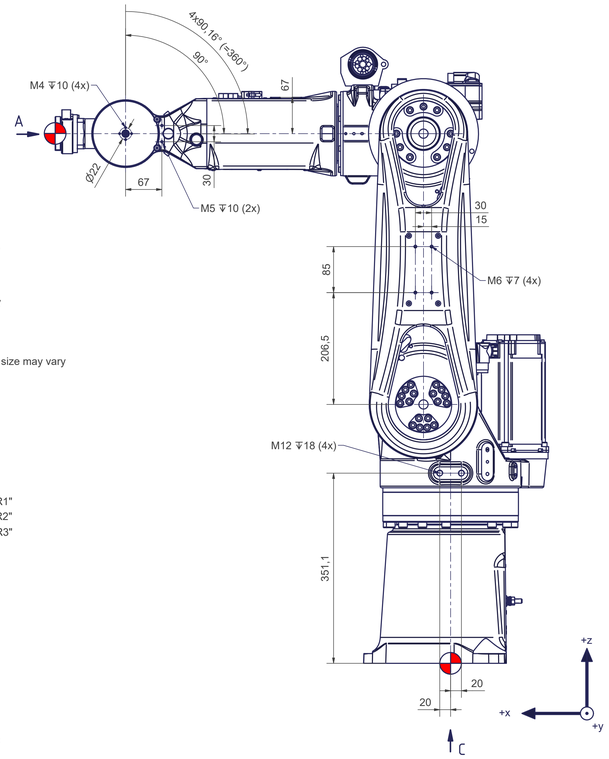

Z (1 : 1)

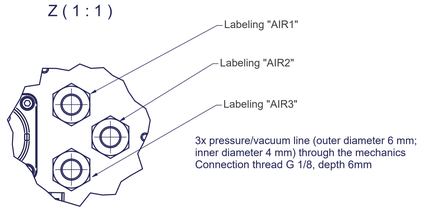

Motion	
Axes	Range fully usable
A1	± 185°
A2	- 130° / + 147,5°
A3	- 185° / + 70°
A4	± 185°
A5	± 132°
A6	± 360°

More information can be found in the document "calibration dimensions"

C (1 : 2)
Base frame

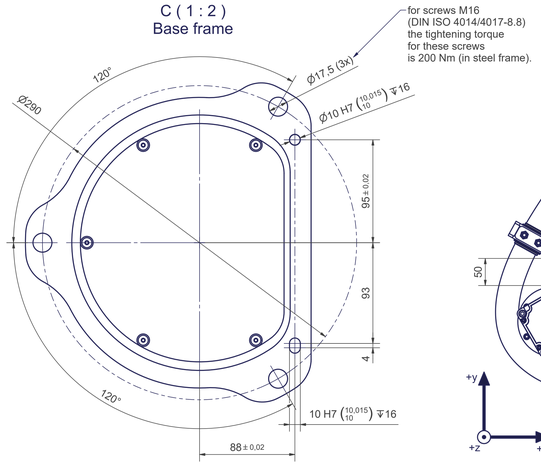

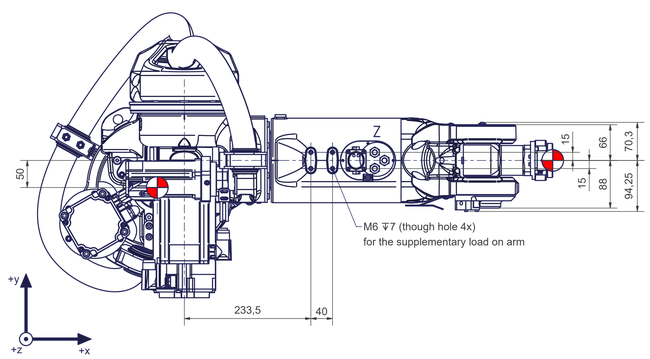

B-B

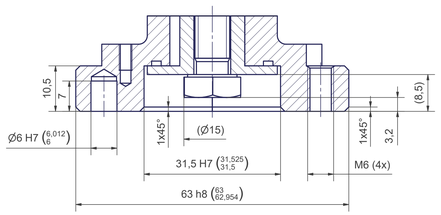

A (2 : 1)
Tool mounting flange

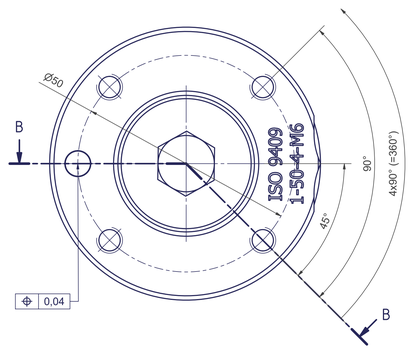

articc6-1230-6kg	
Axes	6
Payload (on TCP)	6 kg
Supplementary load on arm	1,5 kg
Reach	1230 mm
Mounting position	angle, ceiling, floor, wall

Connecting dimensions, valid for article number: AT_00025-SE01

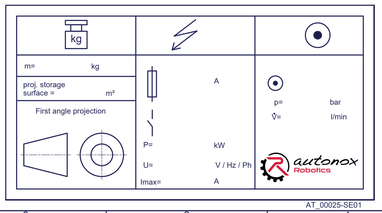

AT_00025-SE01