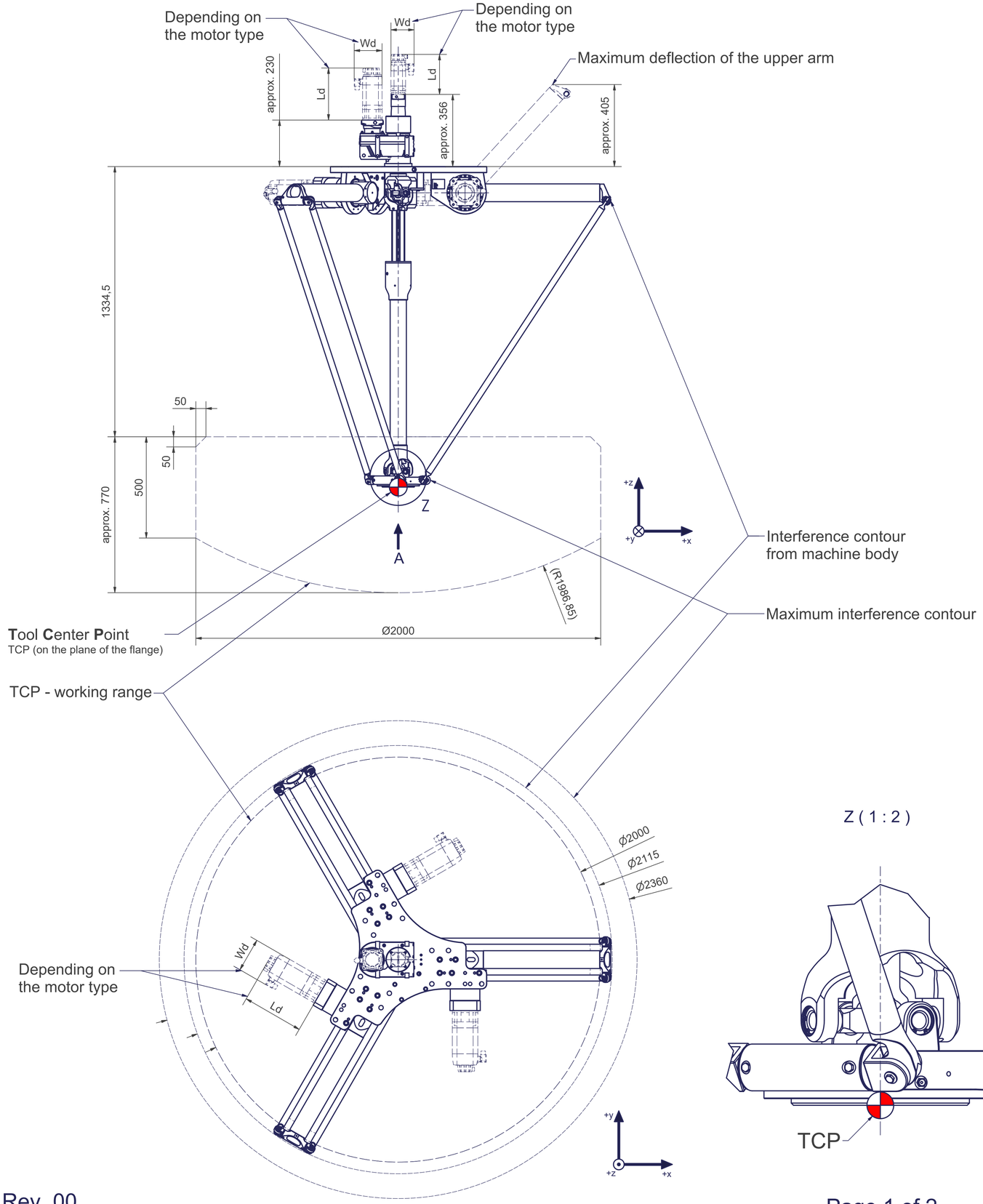

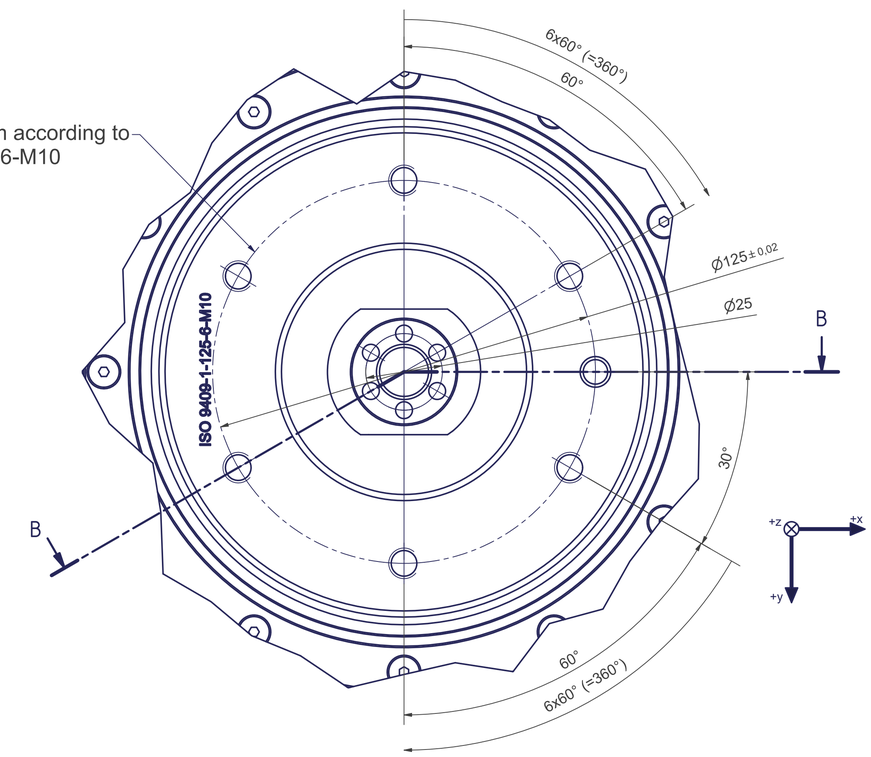

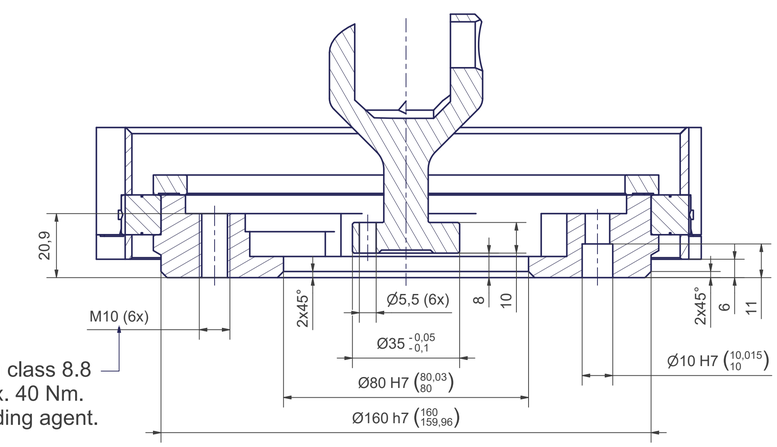

Connecting dimensions,
valid for article number A_00846-T1

kg
m= kg
proj. storage surface = m²
First angle projection
A
P= kW
U= V / Hz / Ph
Imax= A
p= bar
V̇= l/min
autonox Robotics

A_00846-T1

Rev_00

All fastening holes Ø22 mm for screws M20
(DIN ISO 4014/4017 -8.8) without washer.
Fastening holes are coloured red.

Drilling holes for locating pins are filled red.
Recommended dimensions of locating pins: Ø12 h6 ($^{12}_{11,989}$)

Thread holes for screws M20 are coloured green.
The tightening torque for these screws (strength class 8.8) is 170 Nm.

