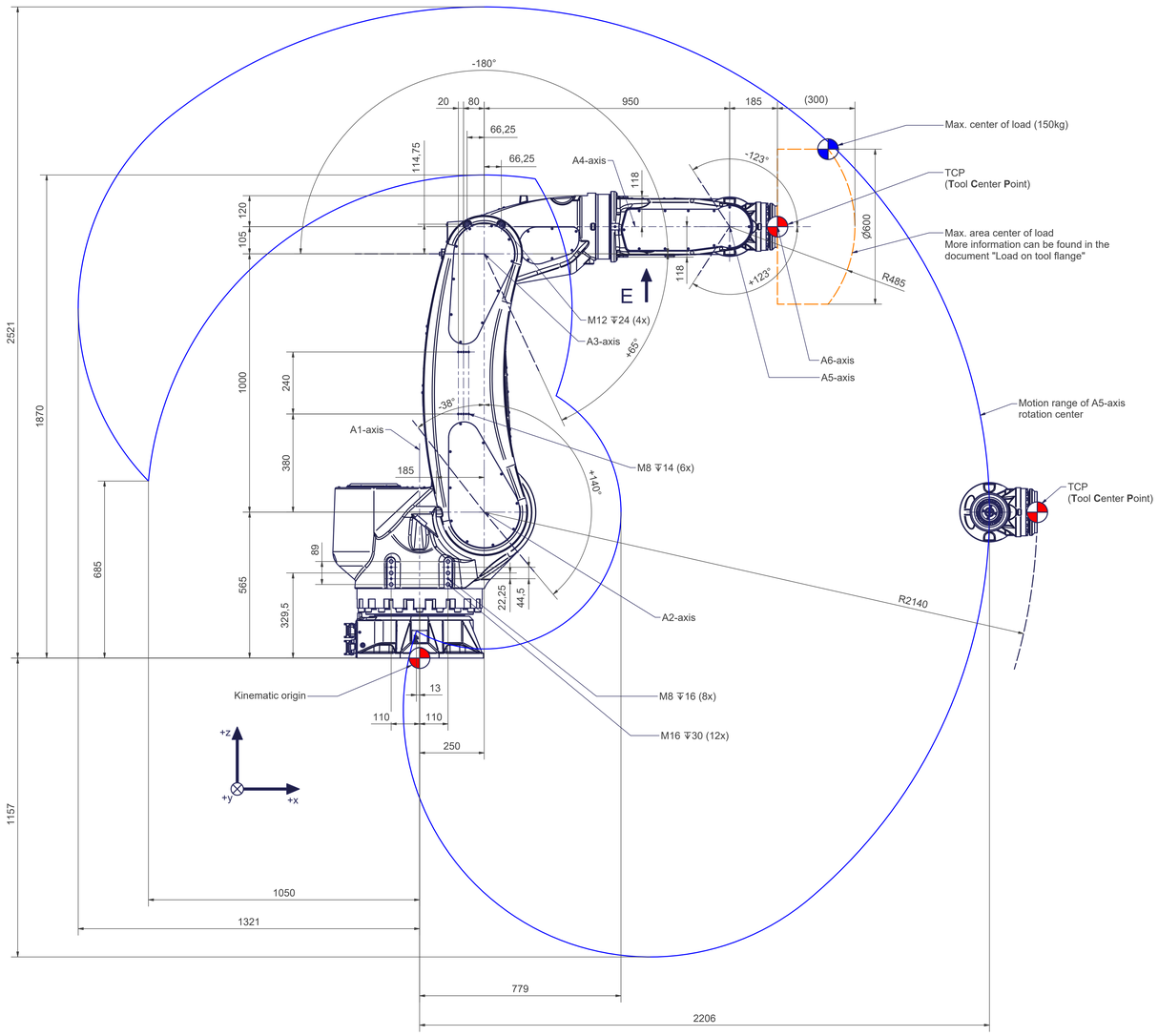

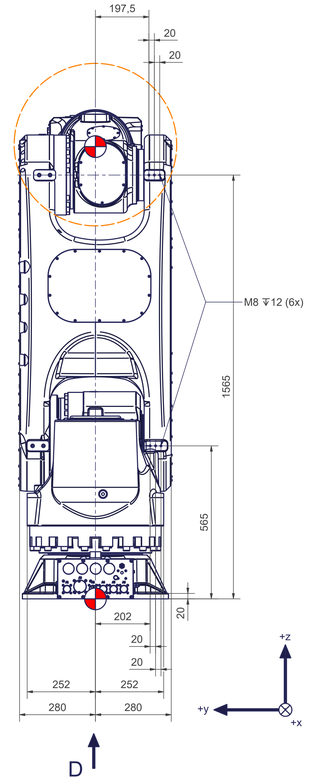

F (1 : 5)

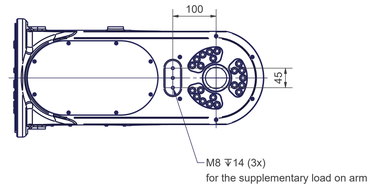

D (1 : 3)
Base frame

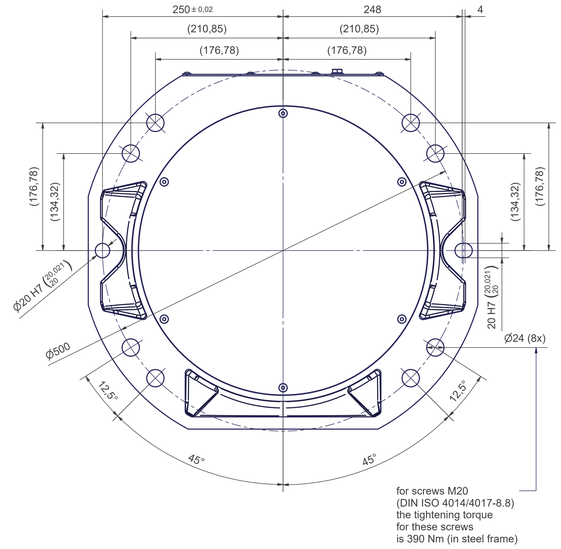

Y (2 : 1)

Z (2 : 1)

E (1 : 5)

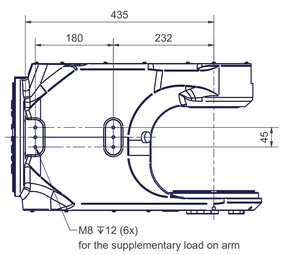

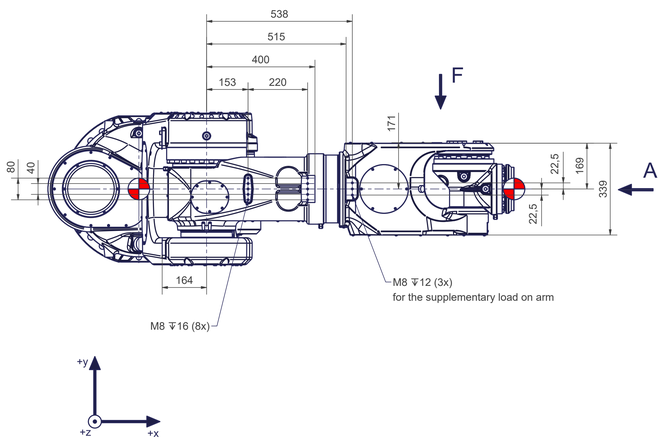

A (1 : 2)
Tool mounting flange A6

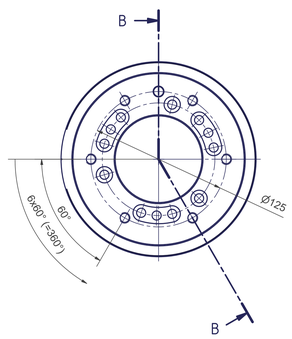

B-B (1 : 2)

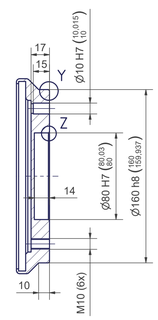

articc.m6-2390-150kg	
Axes	6
Payload (on TCP)	150 kg
Supplementary load on arm	50 kg
Reach	2390 mm
Mounting position	Ceiling, Floor

Motion	
Axes	Range fully usable
A1	± 185°
A2	- 38° / + 140°
A3	- 180° / + 65°
A4	± 250°
A5	± 123°
A6	Mechanical endless (*)

(*) Control system dependent

Connecting dimensions, valid for article number: AT_00016.01

m= kg	A	p= bar
proj. storage surface = m²		Q= l/min
First angle projection	P= kW	autonox Robotics
	U= V / Hz / Ph	
	Imax= A	

AT_00016.01