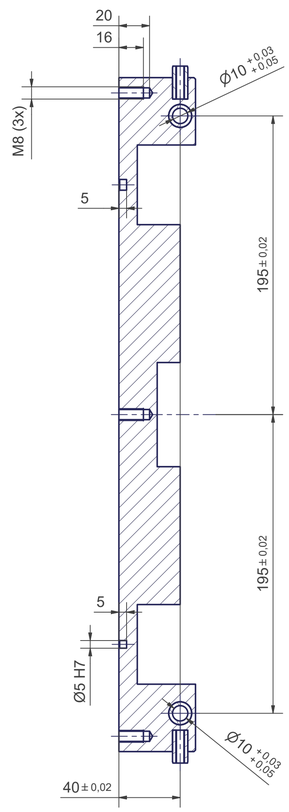

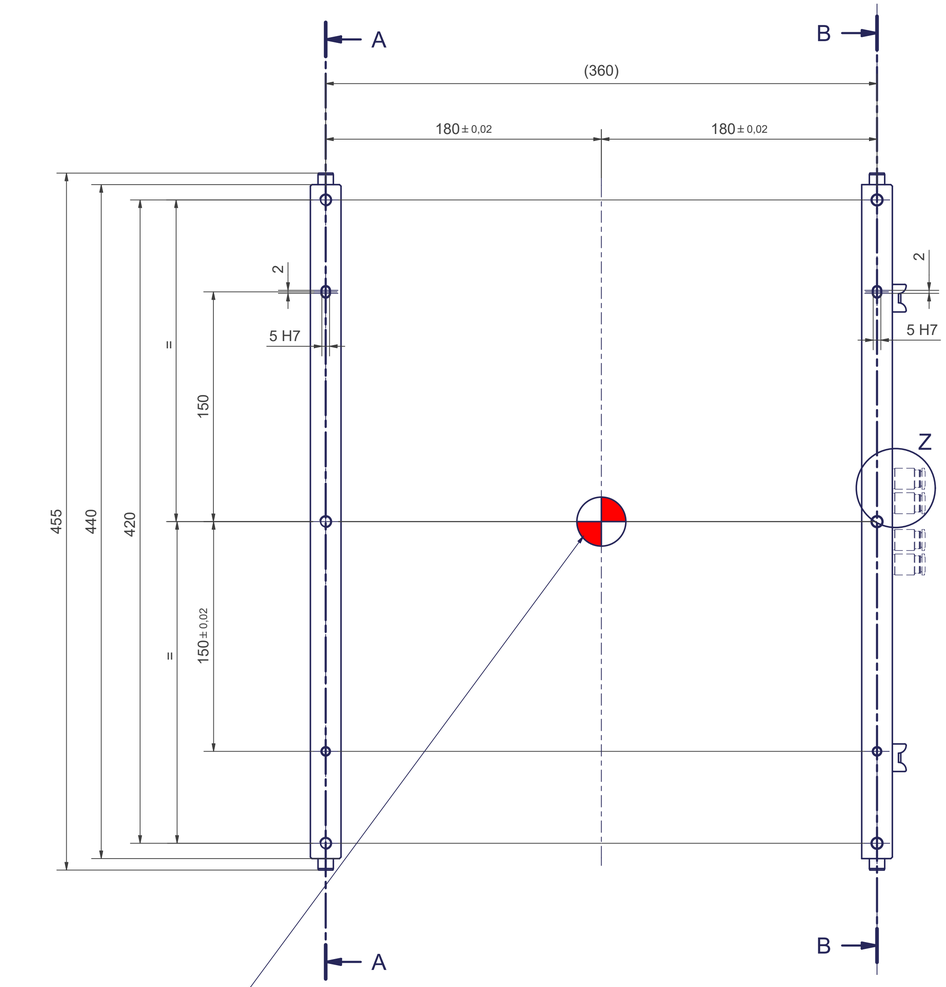

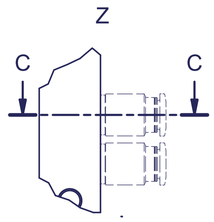

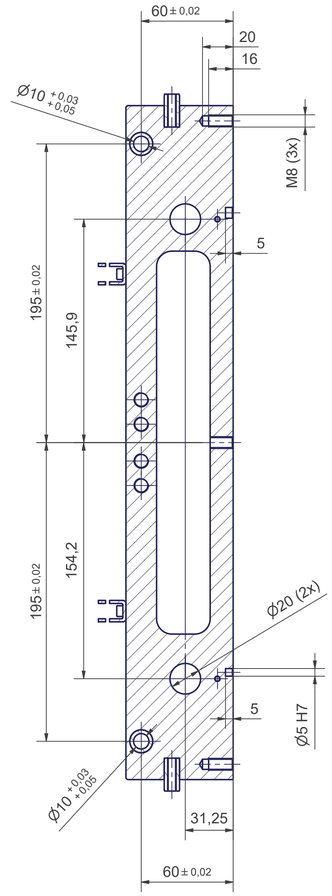

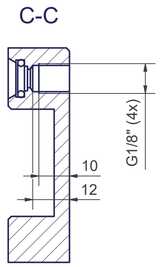

TCP of the robot mechanics refering to the document "Connecting_dimensions".

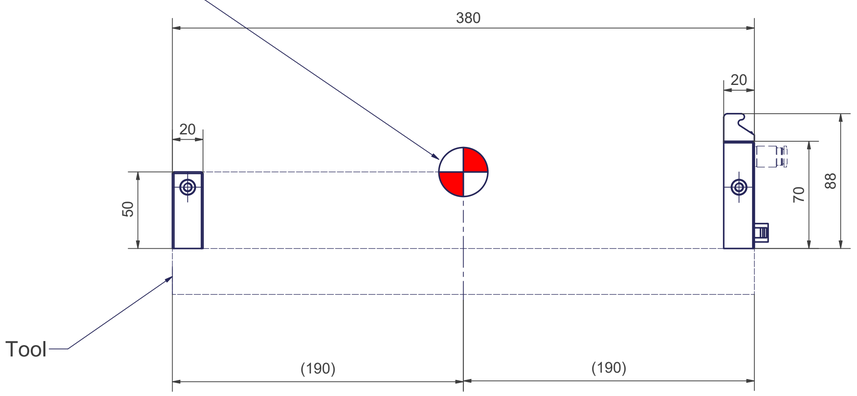

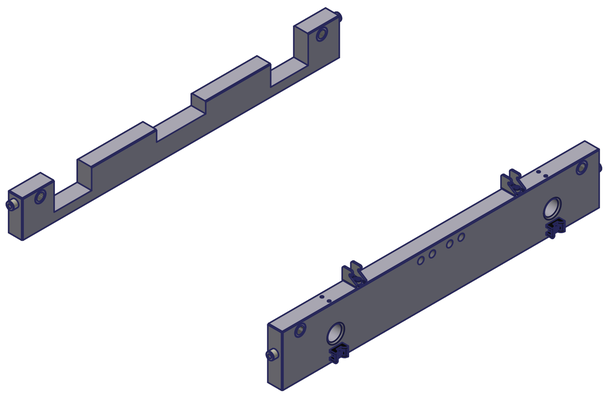

Mass (without customer attachment parts) = 2 kg

kg		
m= kg	A	p= bar
proj. storage surface = m²	P= kW	V̇= l/min
	U= V / Hz / Ph	
	Imax= A	

Connecting dimensions,
valid for article number MT_BGR00103191

MT_BGR00103191