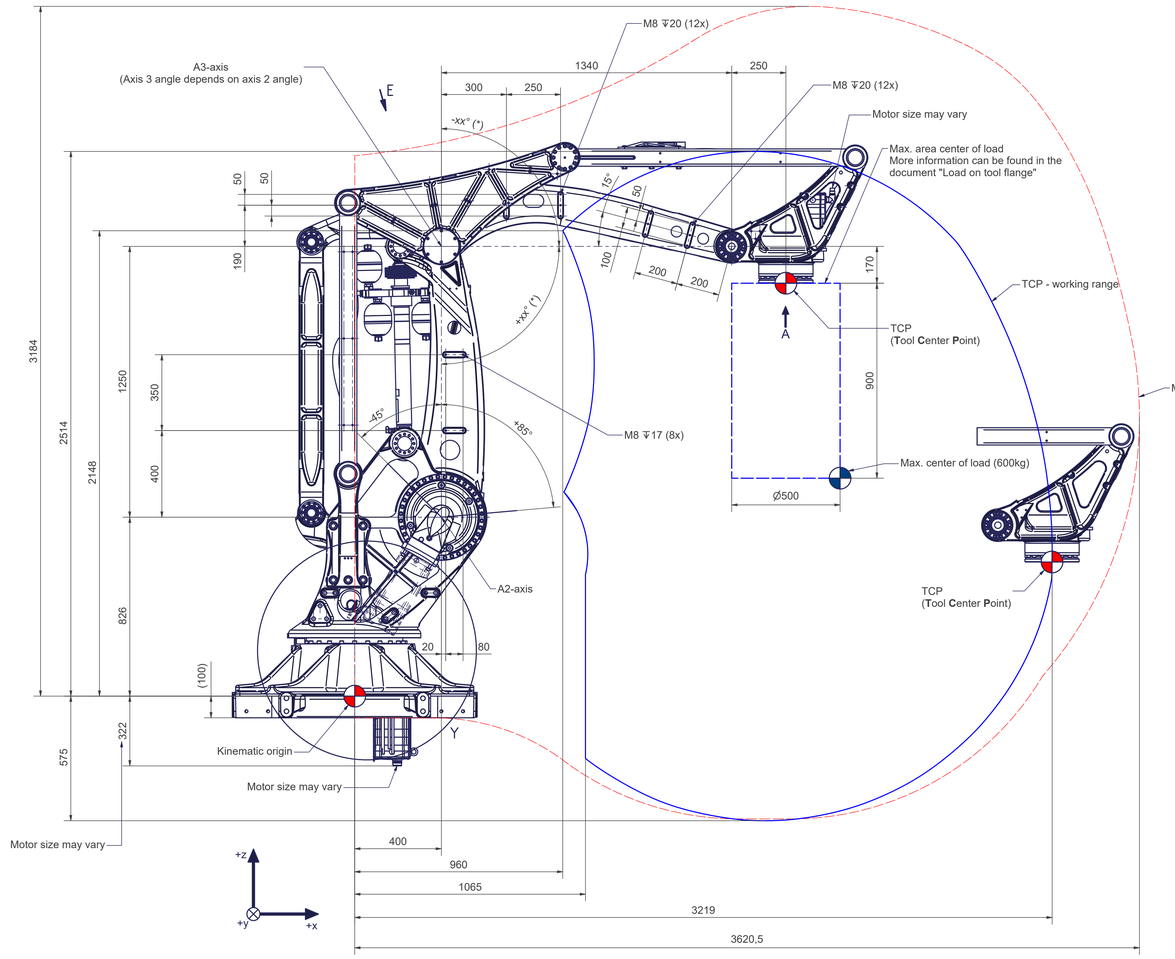


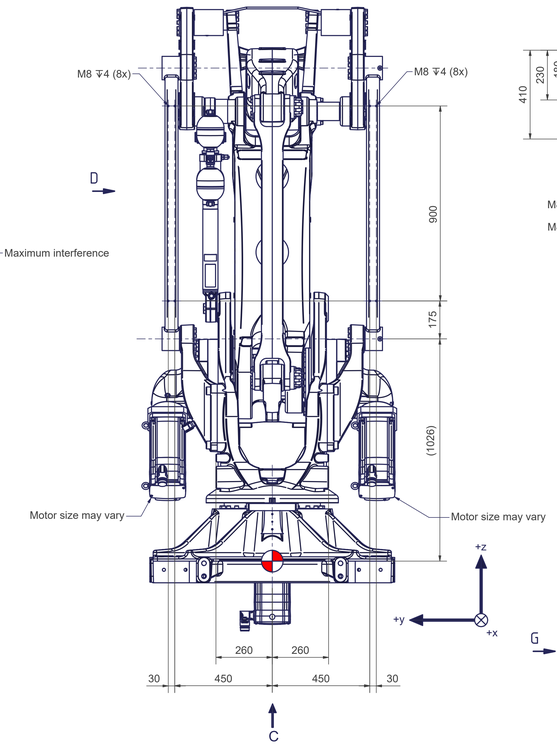


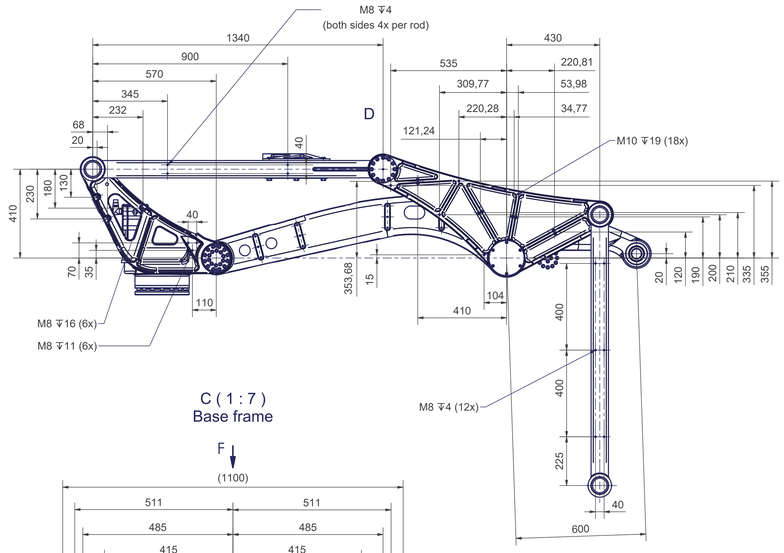


C ( 1 : 7 )
Base frame

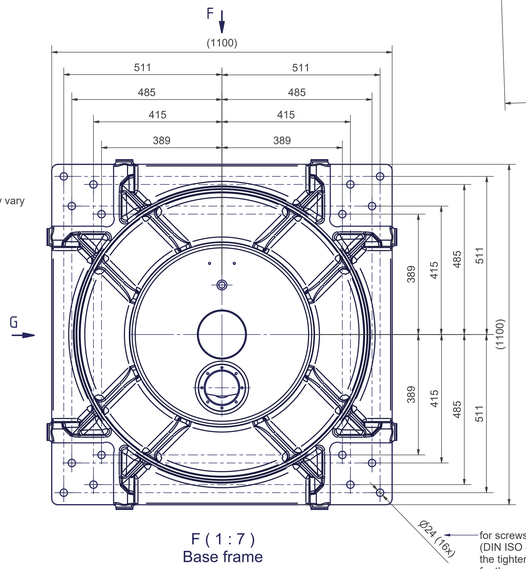


G ( 1 : 7 )
Base frame

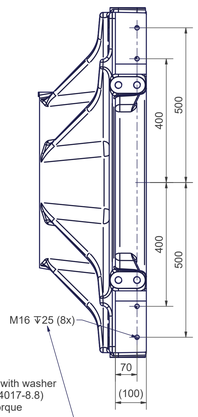


E

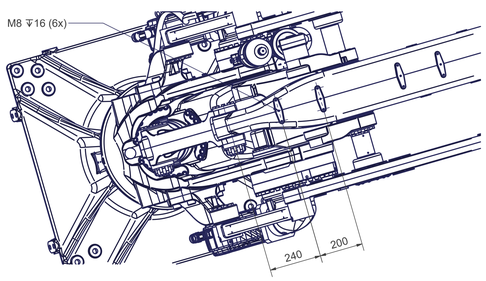


A ( 1 : 2 )
Tool mounting flange A4

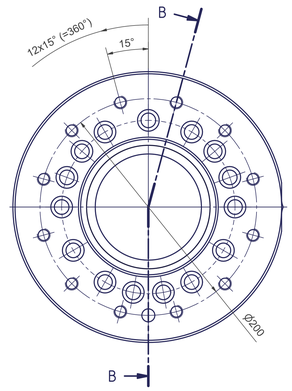


B-B

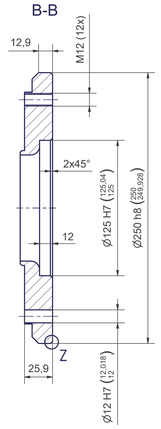


F ( 1 : 7 )
Base frame

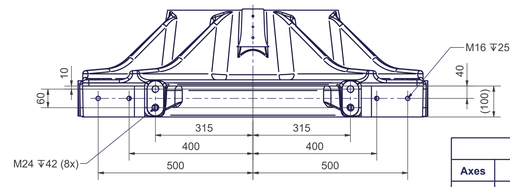


| Motion | | |
|---|---|---|
| Axes | Range fully usable | |
| A1 | ± 185° | |
| A2 | Full range | |
| | - 45° / + 85° | |
| | Different cases | |
| | - 45° / + 48,5° | + 49,5° / + 85° |
| A3 (*) | - 27° - angle axis 2 / + 71,5° | - 75,5° / + 71,5° |
| A4 | Mechanical endless (**) | |

(*) More information can be found in the document "calibration dimensions"
(**) Control system dependent

| articc4-3219-600kg | |
|---|---|
| Axes | 4 |
| Payload (on TCP) | 600 kg |
| Reach | 3219 mm |
| Mounting position | Floor |

Connecting dimensions, valid for article number: AT_00042

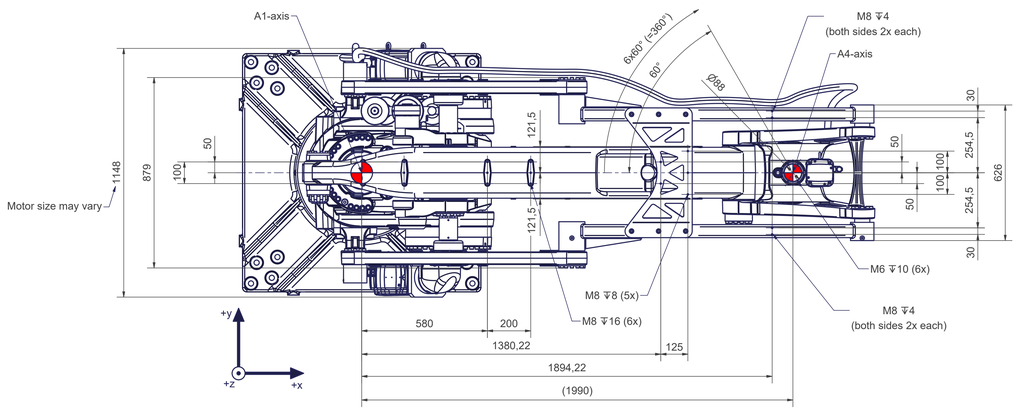


Z ( 5 : 1 )

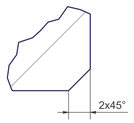


Y ( 1 : 5 )

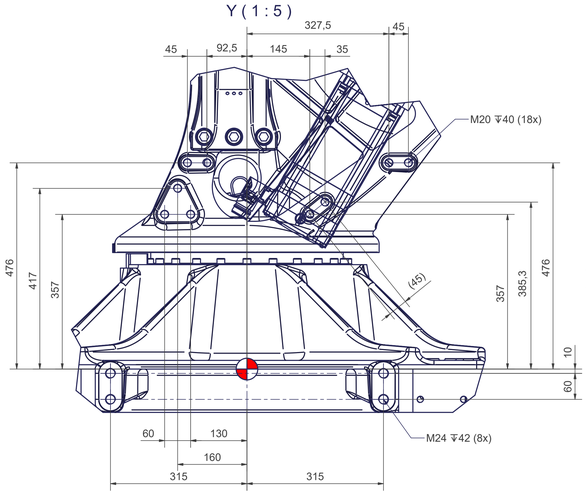


AT_00042