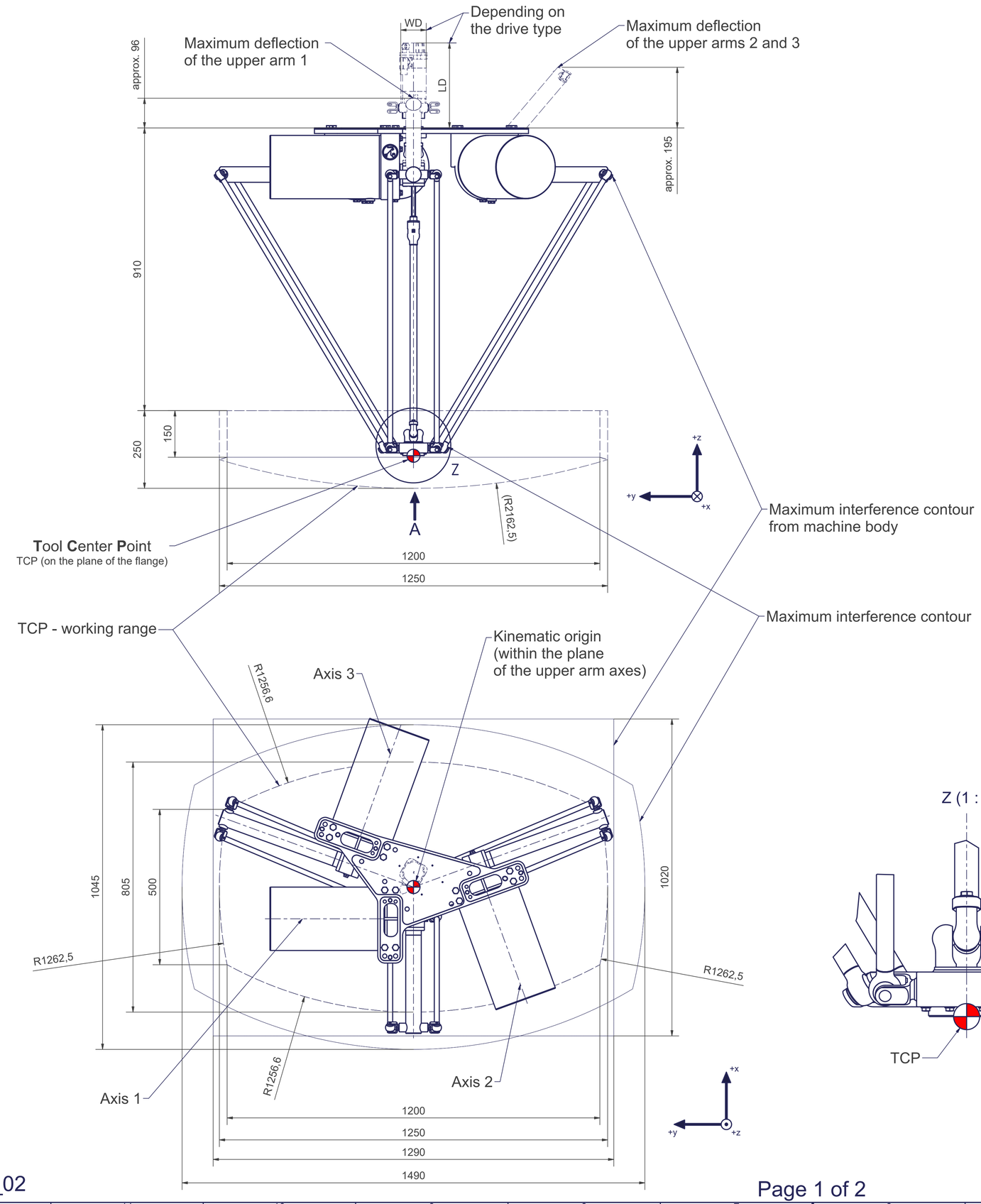

A (2 : 1)

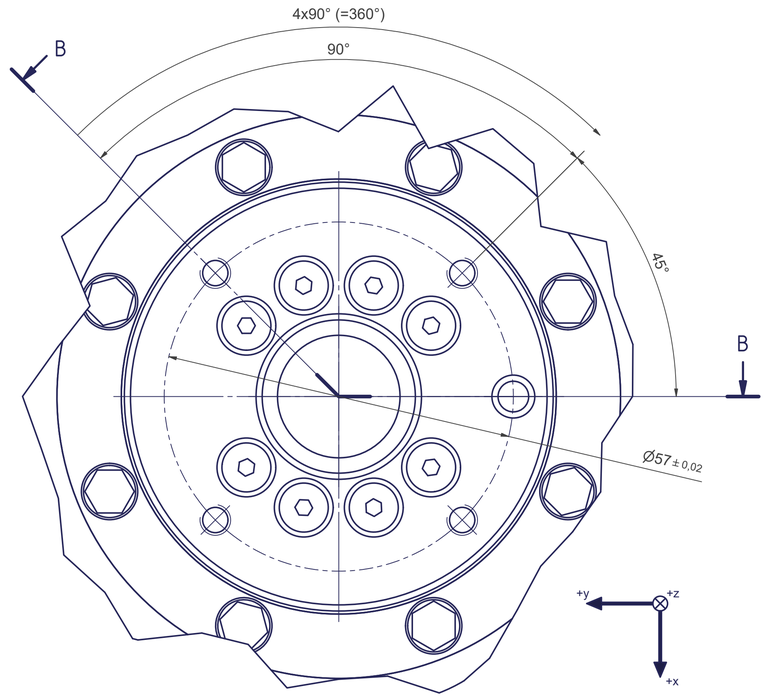

B-B

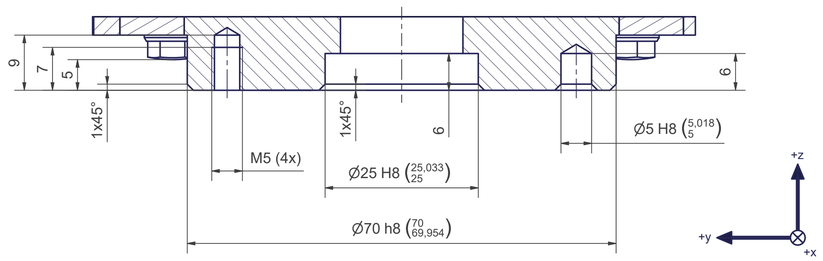

Z (1 : 2)

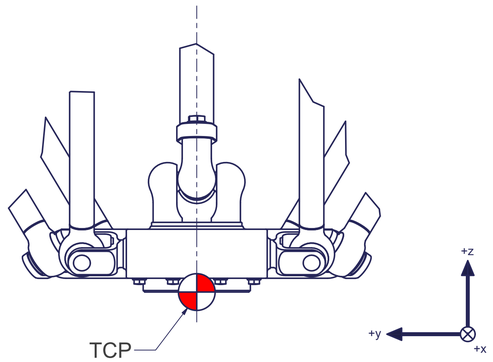

Connecting dimensions, valid for article number A_00876

kg		
m= kg		
proj. storage surface = m²		
First angle projection	A	p= bar
		V̇= l/min
	P= kW	
	U= V / Hz / Ph	autonox Robotics
	Imax= A	

A_00876

Rev_02

All fastening holes Ø13,5 for screws M12
(DIN ISO 8100 -A2) without washers.
Fastening holes are coloured red.

Thread holes for screws M12 are coloured green.
The tightening torque for these screws (strength class 8.8) is 117 Nm.

Drilling holes for locating pins are filled red.
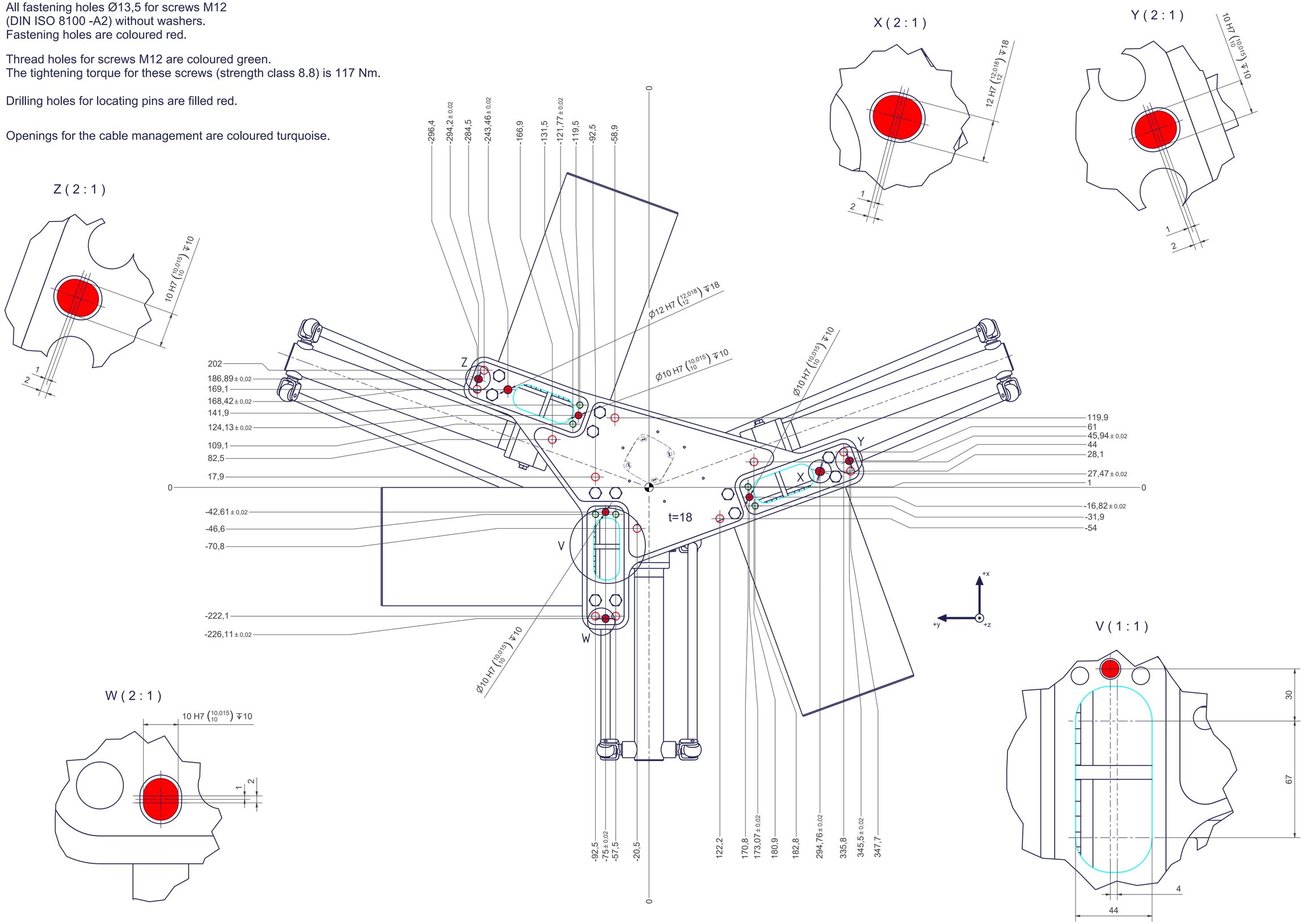
Openings for the cable management are coloured turquoise.