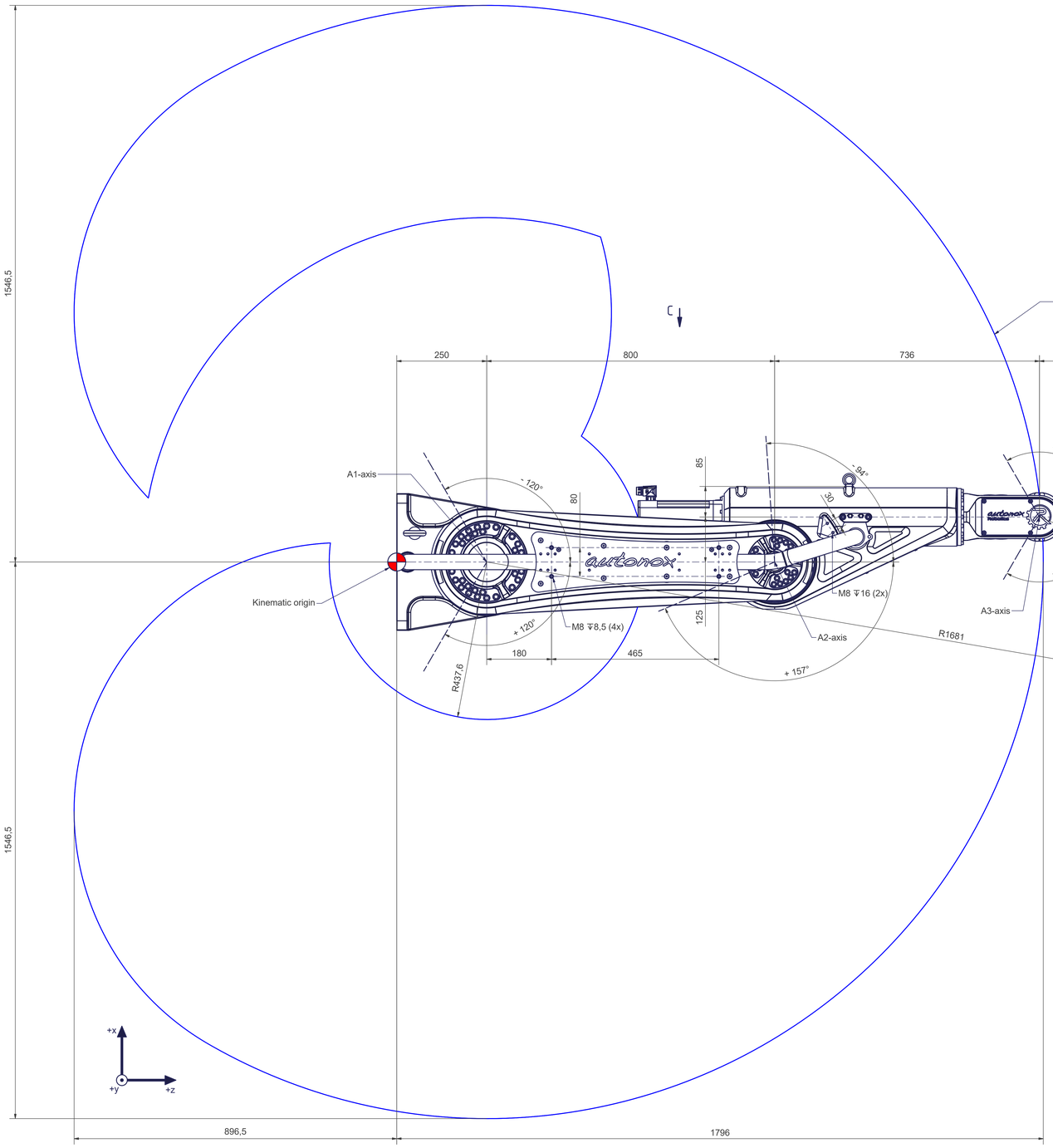

A (1 : 1)
Tool mounting flange A4

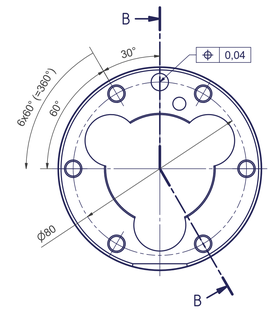

B-B

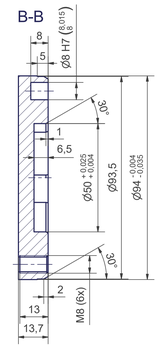

Z (1 : 1)

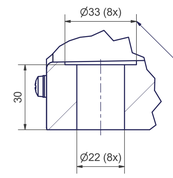

for screws M20
(DIN ISO 4762-8.8)
the tightening torque
for these screws
is 390 Nm (in steel frame)

(1 : 3)
Base frame

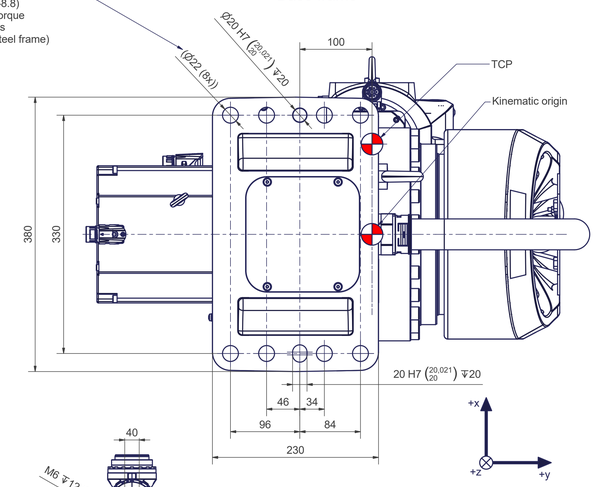

C (1 : 6)

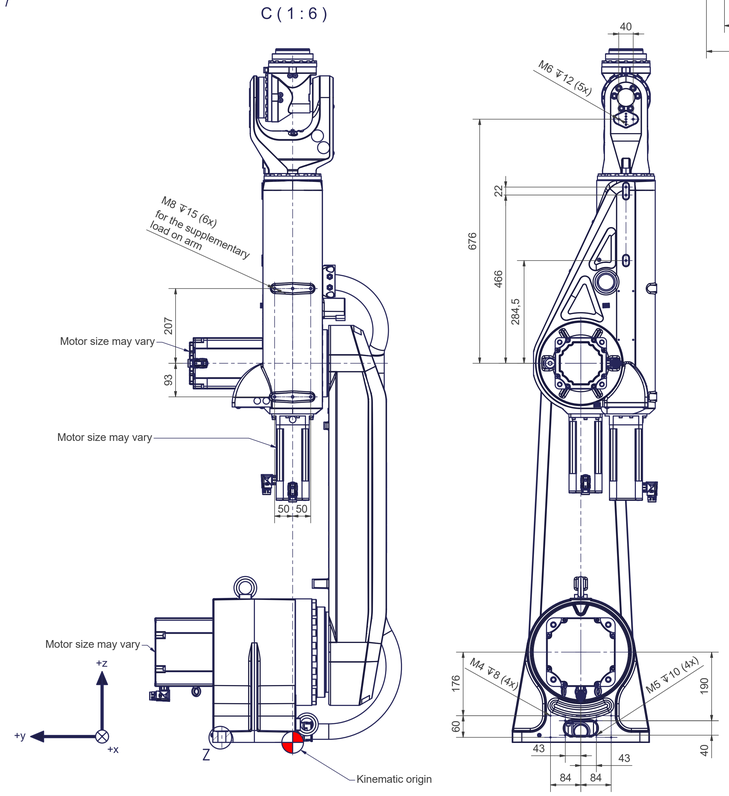

Motion	
Axes	Range fully usable
A1	± 120°
A2	- 94° / + 157 °
A3	± 120°
A4	± 360°

More information can be found in
the document "calibration dimensions"

articc4-1681-60kg	
Axes	4
Payload (on TCP)	60 kg
Supplementary load on arm	40kg
Reach	1681 mm
Mounting position	angle, ceiling, floor, wall

Connecting dimensions, valid for article number: AT_40005

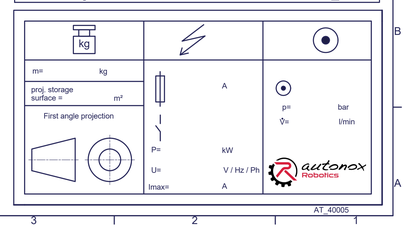

Rev_01

AT_40005