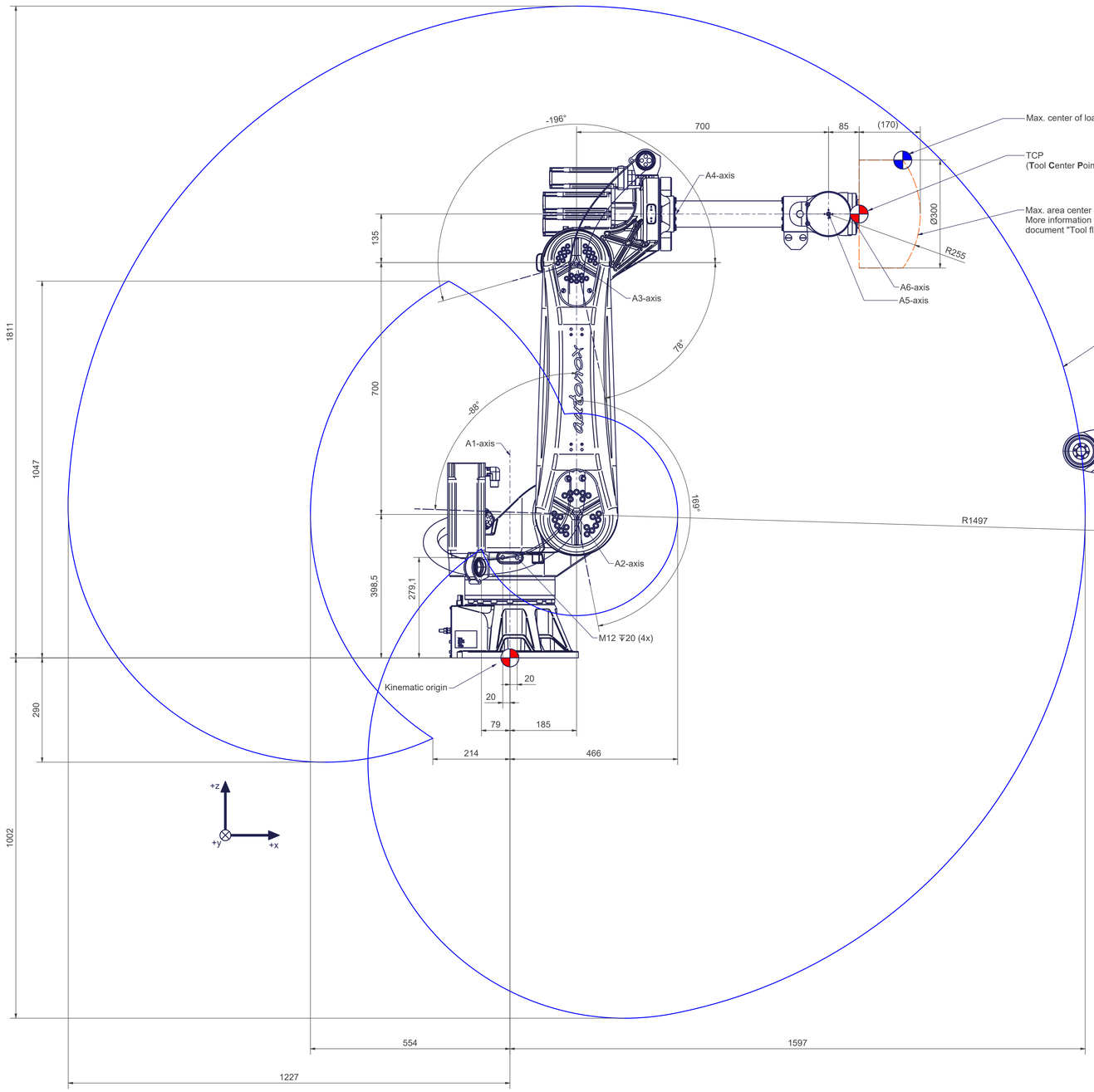

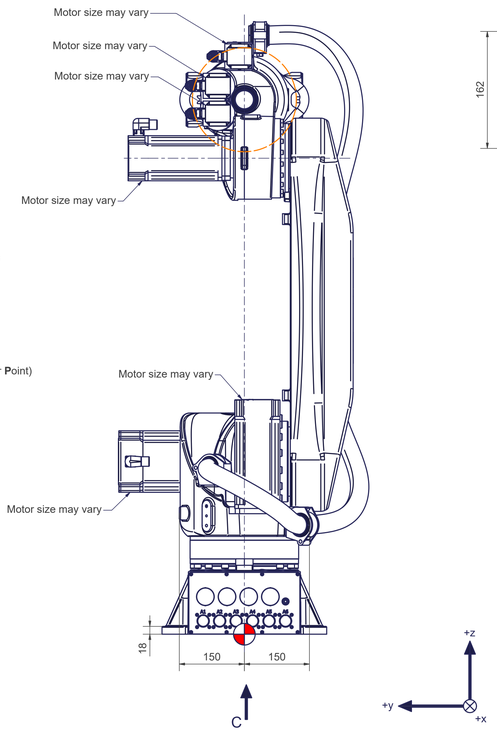

C (1 : 3)
Base frame

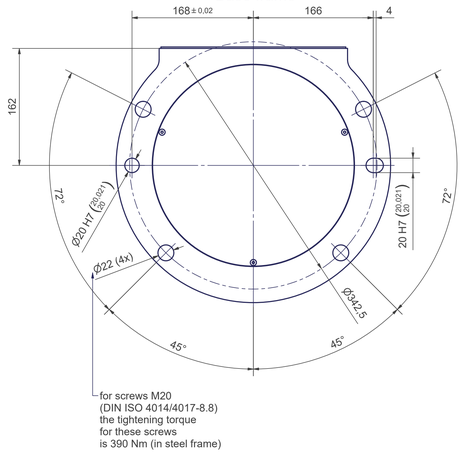

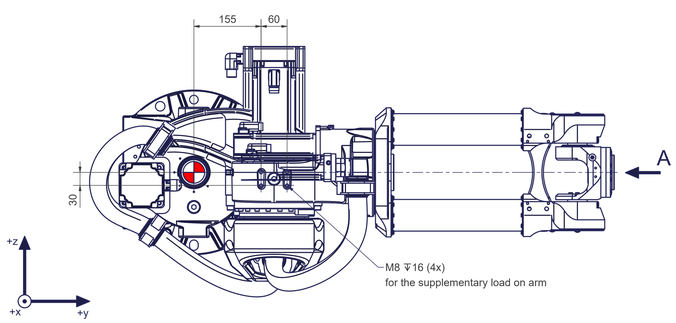

A (3 : 2)
Tool monting flange A6

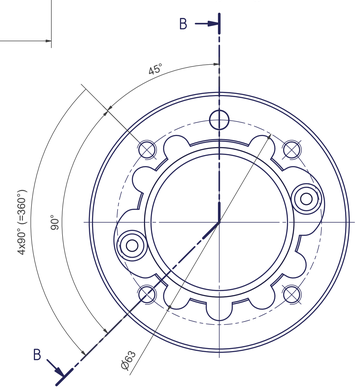

B-B

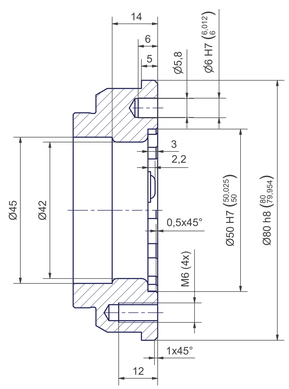

articc.h6-1682-15kg	
Axes	6
Payload (on TCP)	15 kg
Supplementary load on arm	10 kg
Reach	1682 mm
Mounting position	Angel, Ceiling, Floor, Wall

Motion	
Axes	Range fully usable
A1	± 185°
A2	- 88° / + 169°
A3	- 196° / + 78°
A4	Mechanical endless (¹)(³)
A5	Mechanical endless (²)(³)
A6	Mechanical endless (³)

More information can be found in the document "calibration dimensions"

(¹) if axis 2 is between - 88° and - 75° and axis 3 ist between + 68° and + 78° **axis 4** must be limited on **- 53°** and **+ 22°**

(²) Without tools

(³) Control system dependent

Connecting dimensions, valid for article number: AT_00012

kg		
m= kg		
proj. storage surface = m²	A	p= bar
First angle projection		Q= l/min
	P= kW	
	U= V / Hz / Ph	autonox Robotics
	Imax= A	

AT_00012

Rev_05