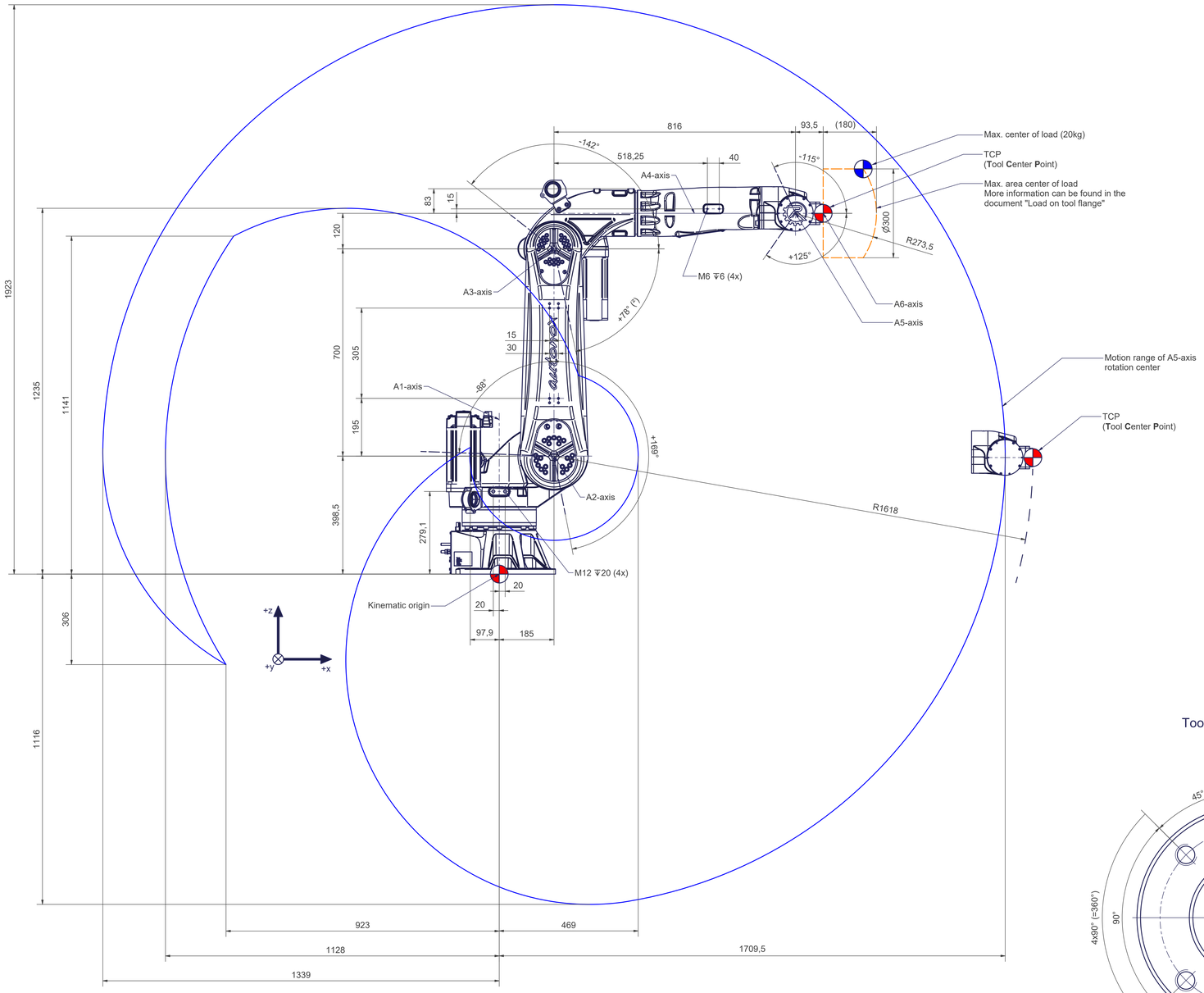

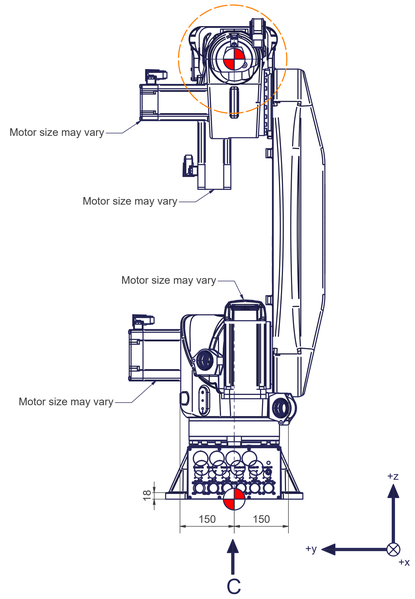

C (1 : 3)
Base frame

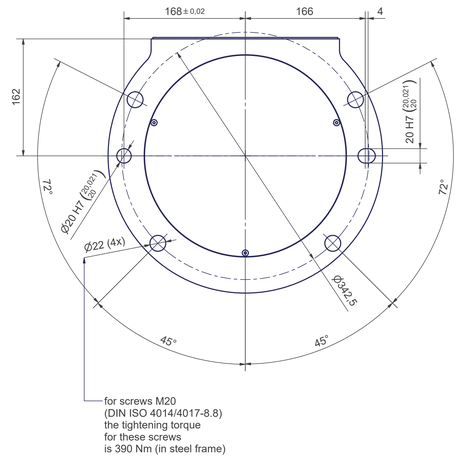

A (2 : 1)
Tool mounting flange

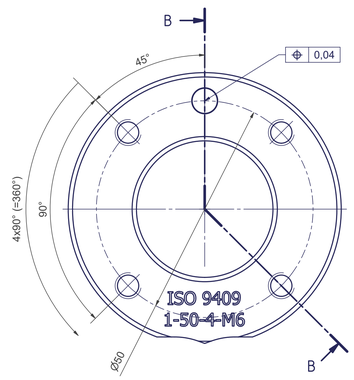

B-B

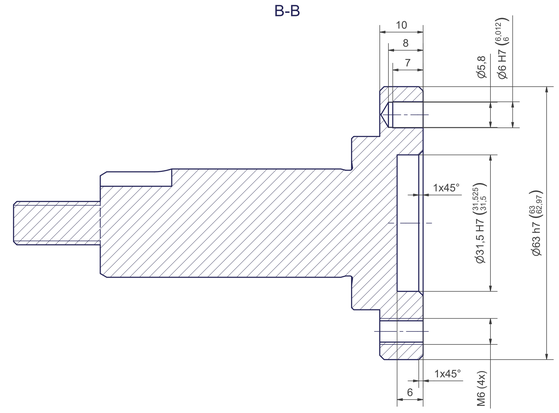

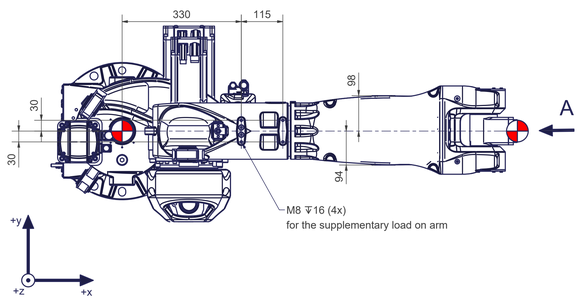

articc6-1803-20kg	
Axes	6
Payload (on TCP)	20 kg
Supplementary load on arm	10 kg
Reach	1803 mm
Mounting position	Angle, Ceiling, Floor, Wall

Motion	
Axes	Range fully usable
A1	± 185°
A2	- 88° / + 169° (¹)
A3	- 142° / + 78° (¹) (²)
A4	± 185°
A5	- 115° / + 125°
A6	Mechanical endless (³)

(¹) More information can be found in the document "calibration dimensions"

(²) If axis 2 is between - 88° and - 80°, axis 3 must be limited on
A3 = 78° - angle axis 2 + 80°

(³) Control system dependent

Connecting dimensions, valid for article number: AT_00014

kg		
m= kg	A	p= bar
		V̇= l/min
proj. storage surface = m²	P= kW	
	U= V / Hz / Ph	
	Imax= A	

autonox Robotics

Rev_04

AT_00014