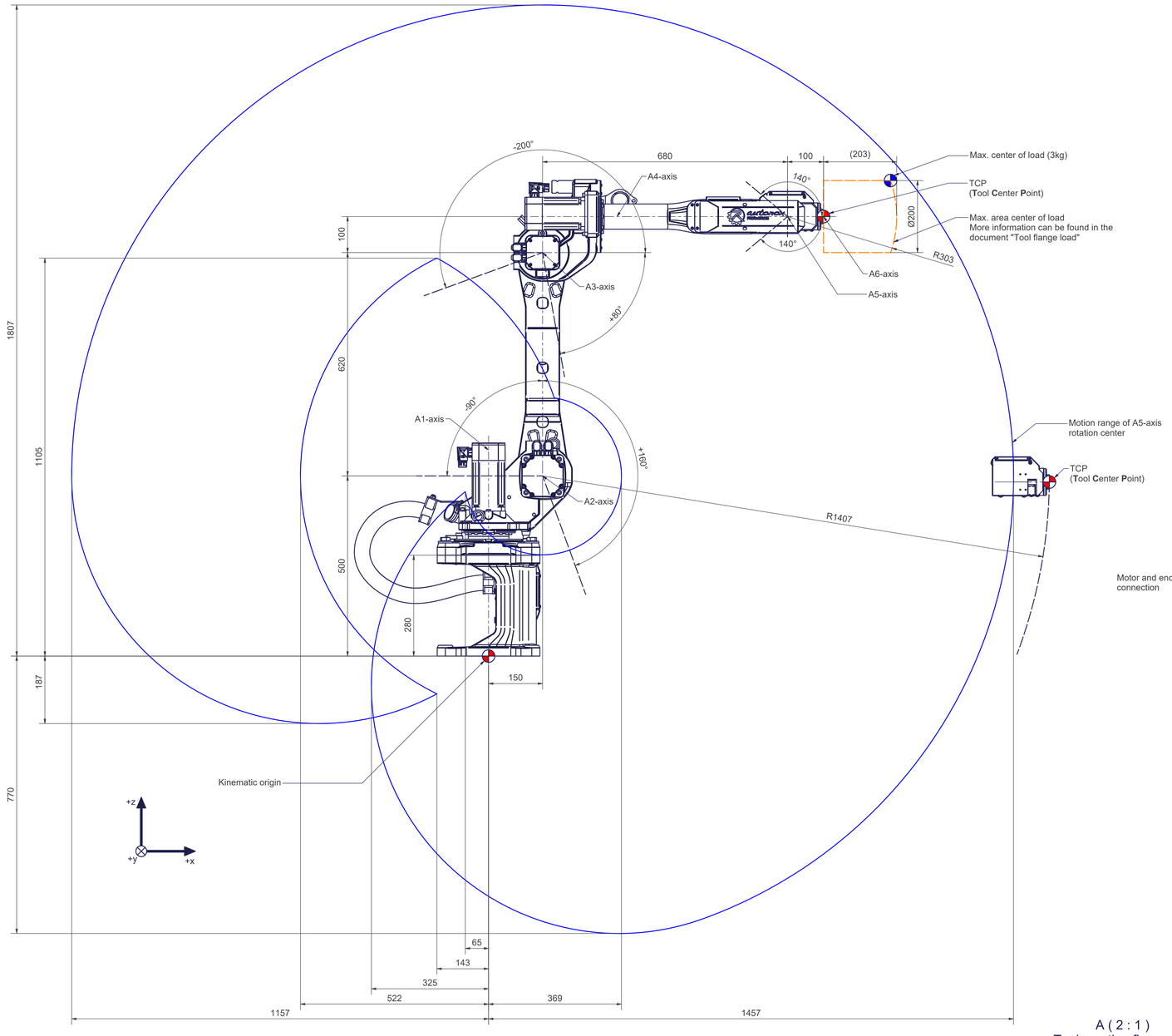

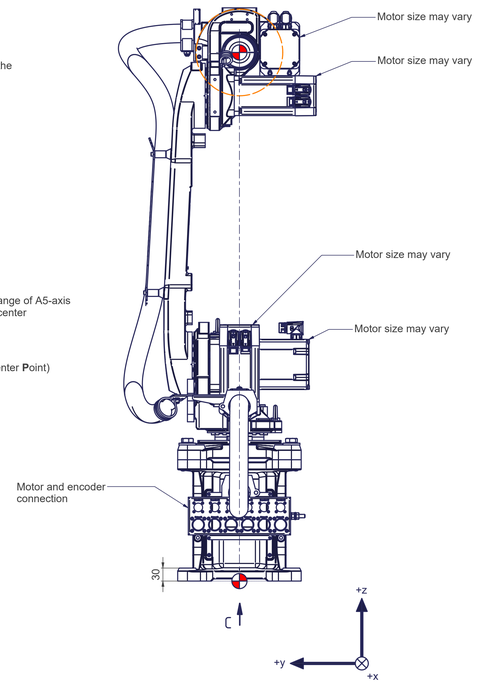

C (1 : 2)
Base frame

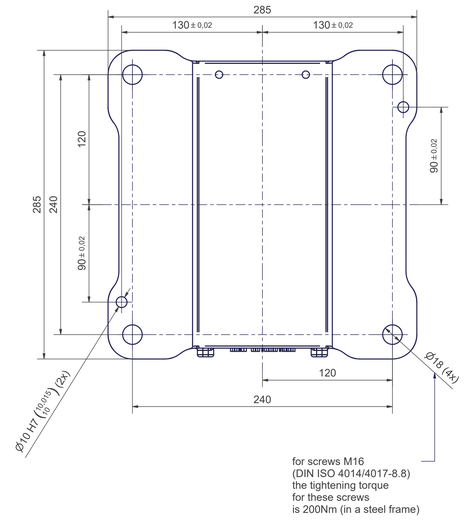

articc6-1557-3kg	
Axes	6
Payload (on TCP)	3 kg
Reach	1557 mm
Mounting position	Floor, ceiling

Motion	
Axes	Range fully usable
A1	± 180°
A2	- 90° / + 160°
A3	- 200° / + 80°
A4	± 190°
A5	± 140°
A6	± 3000°

More information can be found in the document "calibration dimensions"

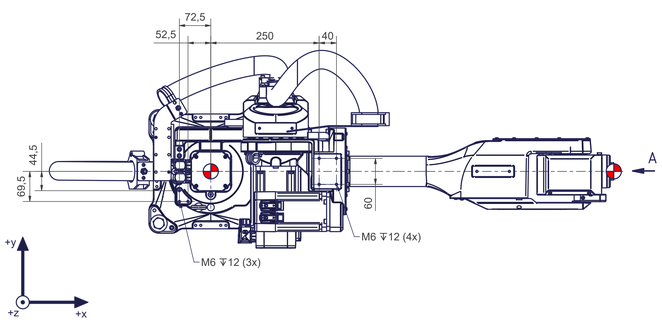

A (2 : 1)
Tool monting flange A6

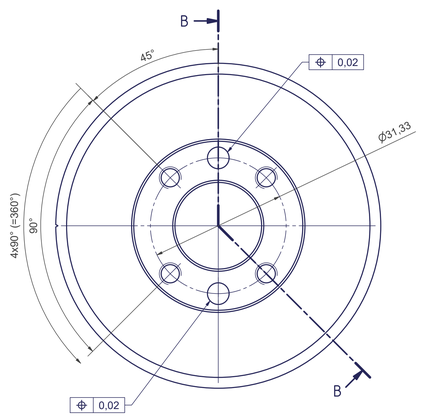

B-B

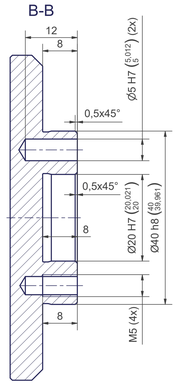

Connecting dimensions, valid for article number: AT_00004

m= kg	A	p= bar
proj. storage surface = m²	P= kW	V̇= l/min
	U= V / Hz / Ph	
	Imax= A	

AT_00004

Rev_02