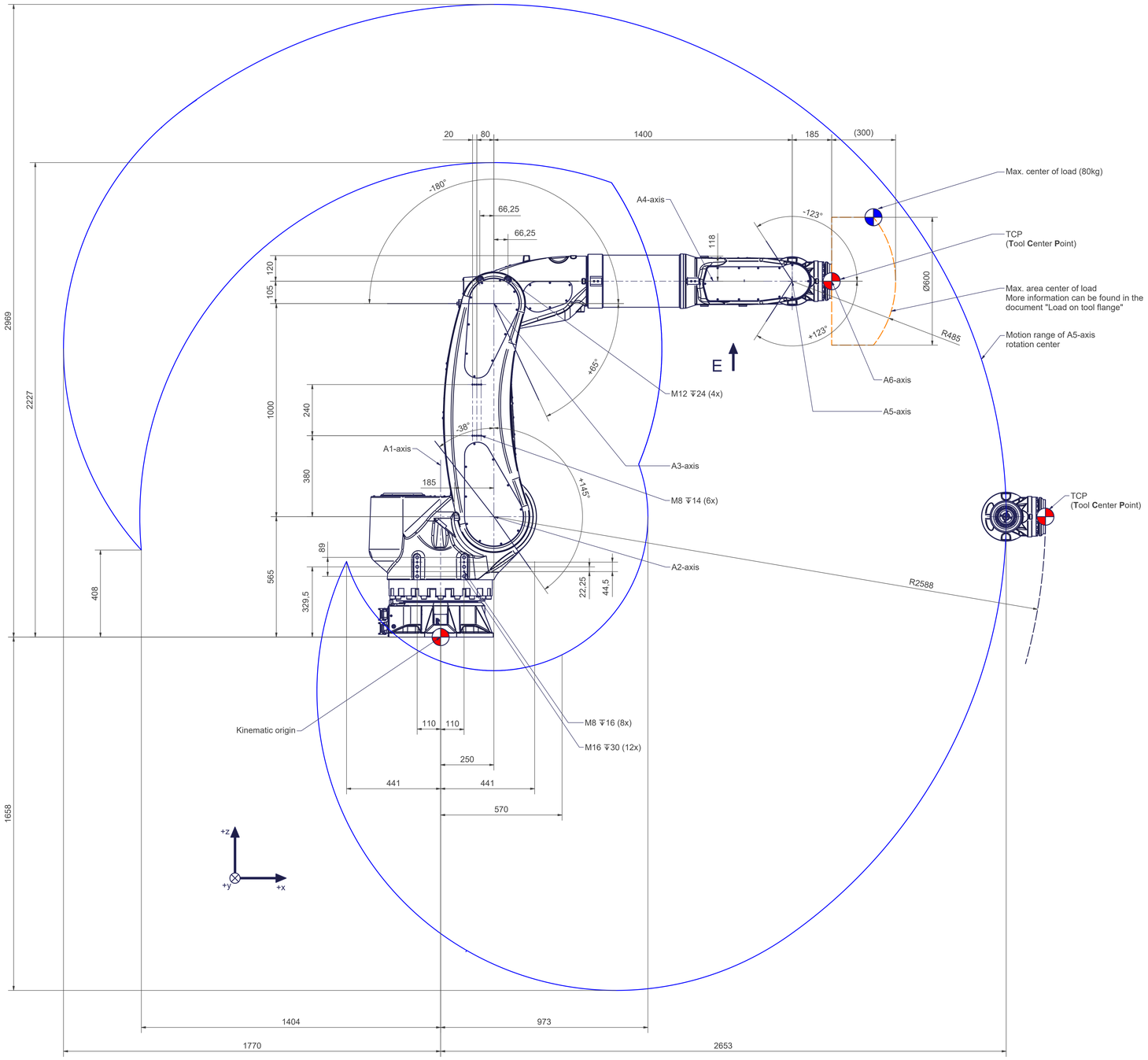

F (1 : 5)

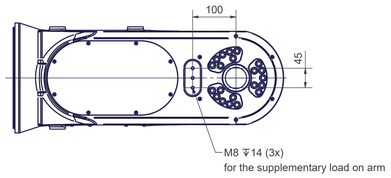

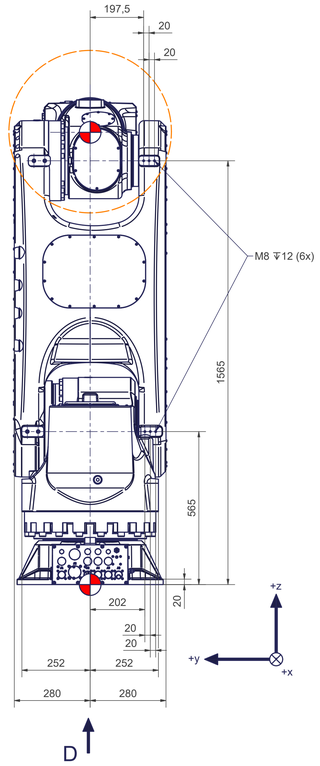

D (1 : 3)
Base frame

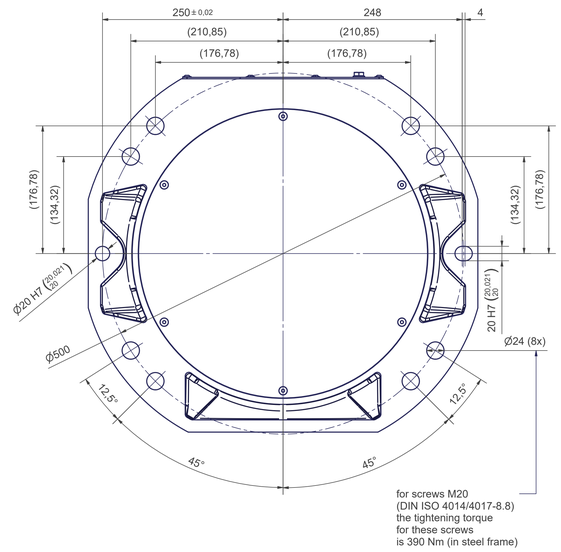

Y (2 : 1)

Z (2 : 1)

A (1 : 2)
Tool mounting flange A6

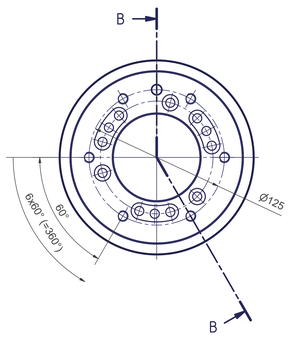

B-B

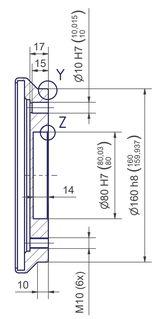

articc.m6-2838-80kg	
Axes	6
Payload (on TCP)	80kg
Supplementary load on arm	20 kg
Reach	2838 mm
Mounting position	Ceiling, Floor

Motion	
Axes	Range fully usable
A1	± 185°
A2	- 38° / + 145° (*)
A3	- 180° / + 65° (*)
A4	± 270°
A5	± 123°
A6	Mechanical endless (**)

(*) More information can be found in the document "calibration dimensions".
(**) Control system dependent.

E (1 : 5)

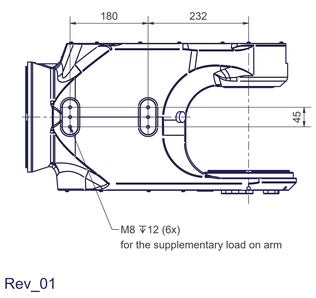

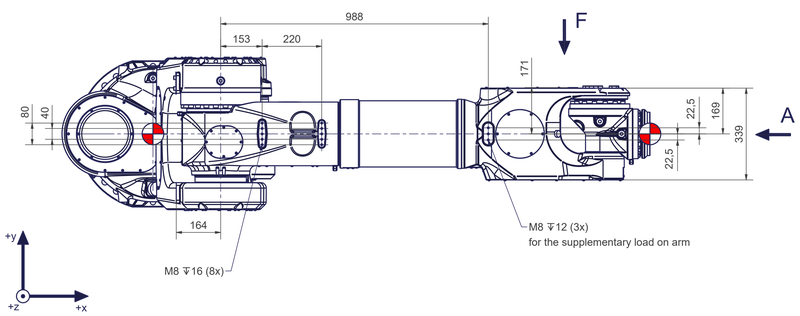

Connecting dimensions, valid for article number: AT_00035

kg		
m= kg		
proj. storage surface = m²		
First angle projection		
	A	A
	P= kW	p= bar
	U= V / Hz / Ph	V̇= l/min
	Imax= A	

autonox Robotics

AT_00035

Rev_01