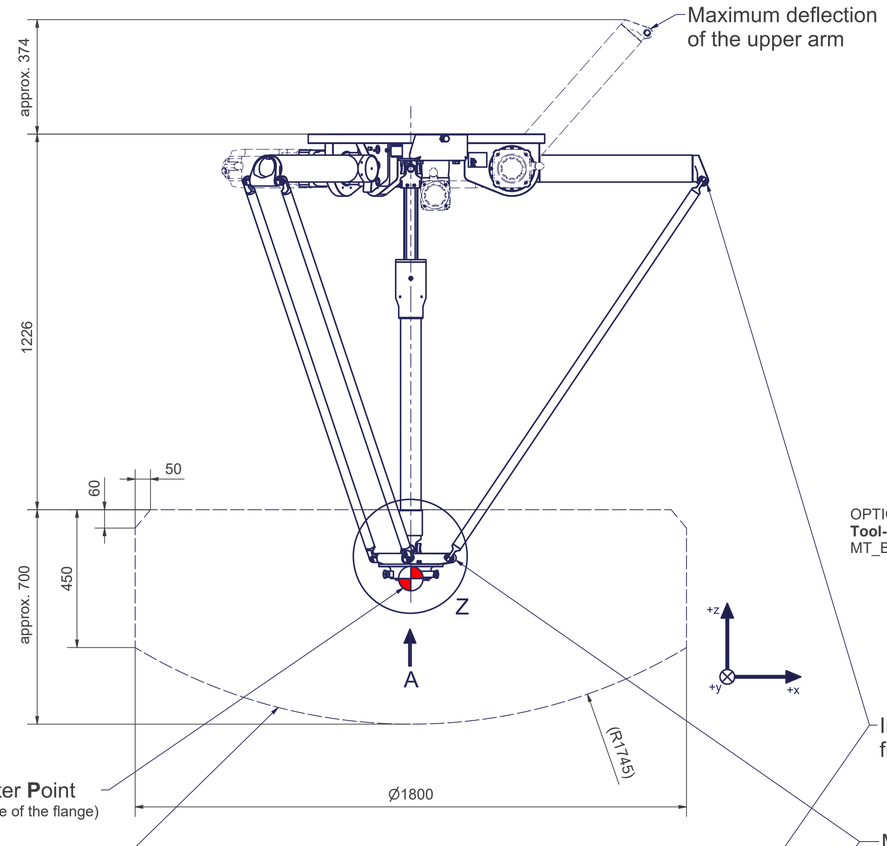

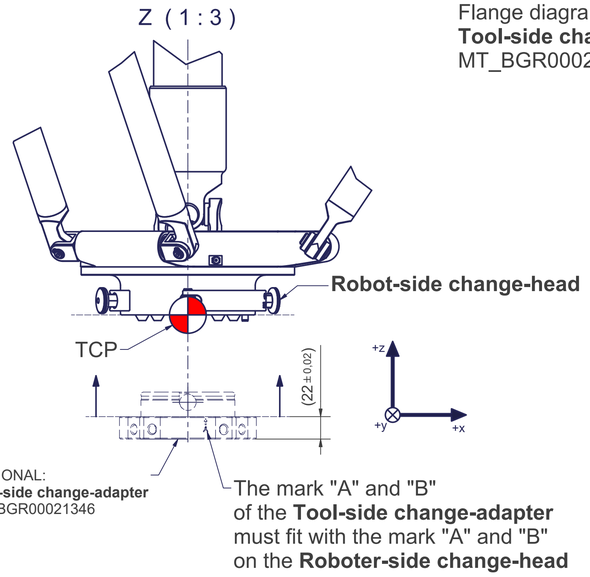

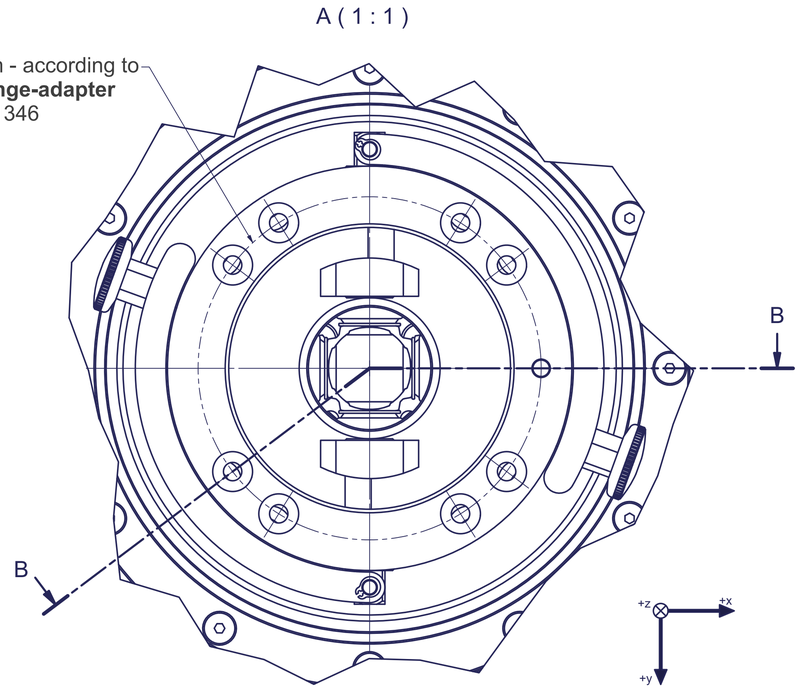

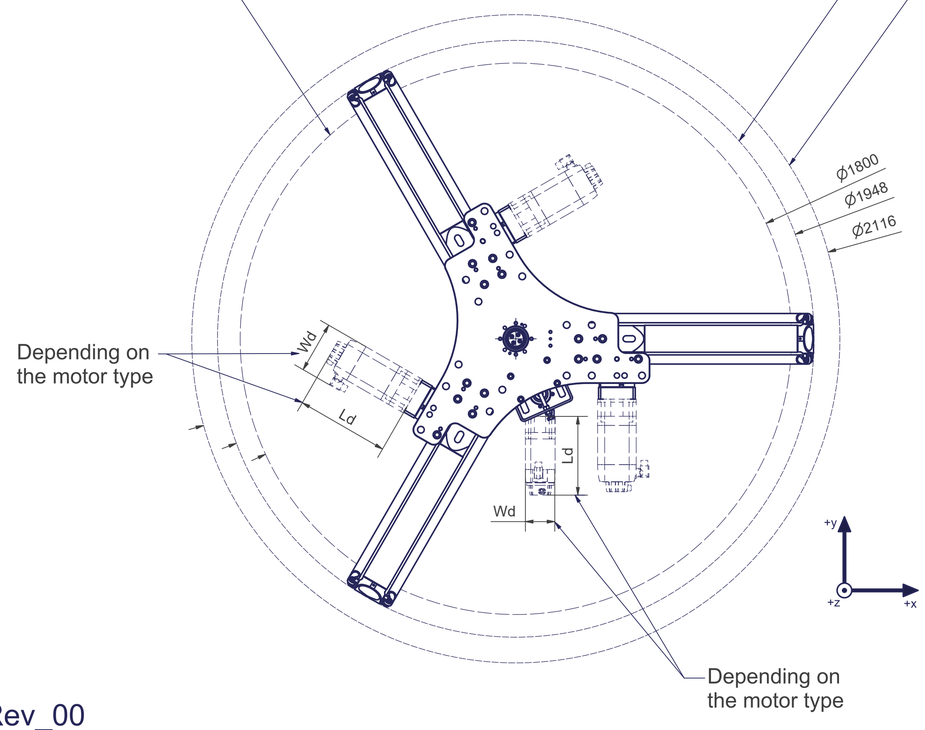

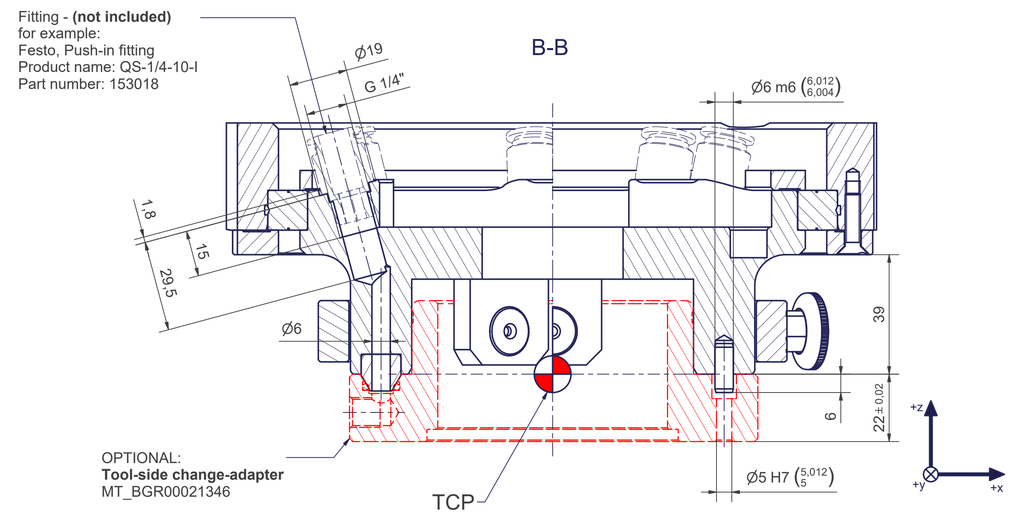

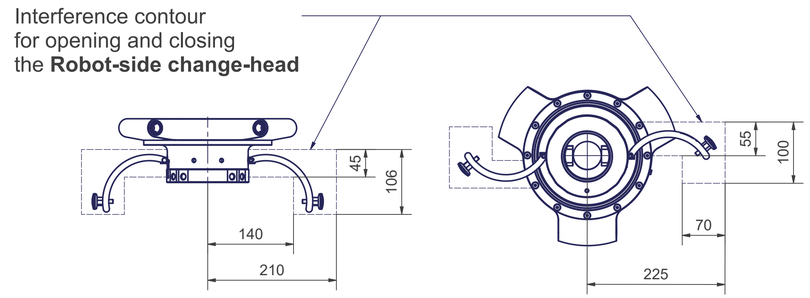

OPTIONAL:

Tool-side change-adapter MT_BGR00021346

Connecting dimensions,
valid for article number A_00649-ATS

kg		
m= kg	A	
proj. storage surface = m²		p= bar
First angle projection		V̇= l/min
	P= kW	
	U= V / Hz / Ph	autonox Robotics
	Imax= A	

A_00649-ATS

Rev_00

All fastening holes Ø22 mm for screws M20
(DIN ISO 4014/4017 -8.8) without washer.
Fastening holes are coloured red.

Drilling holes for locating pins are filled red.
Recommended dimensions of locating pins: Ø12 h6 ($^{12}_{11,989}$)
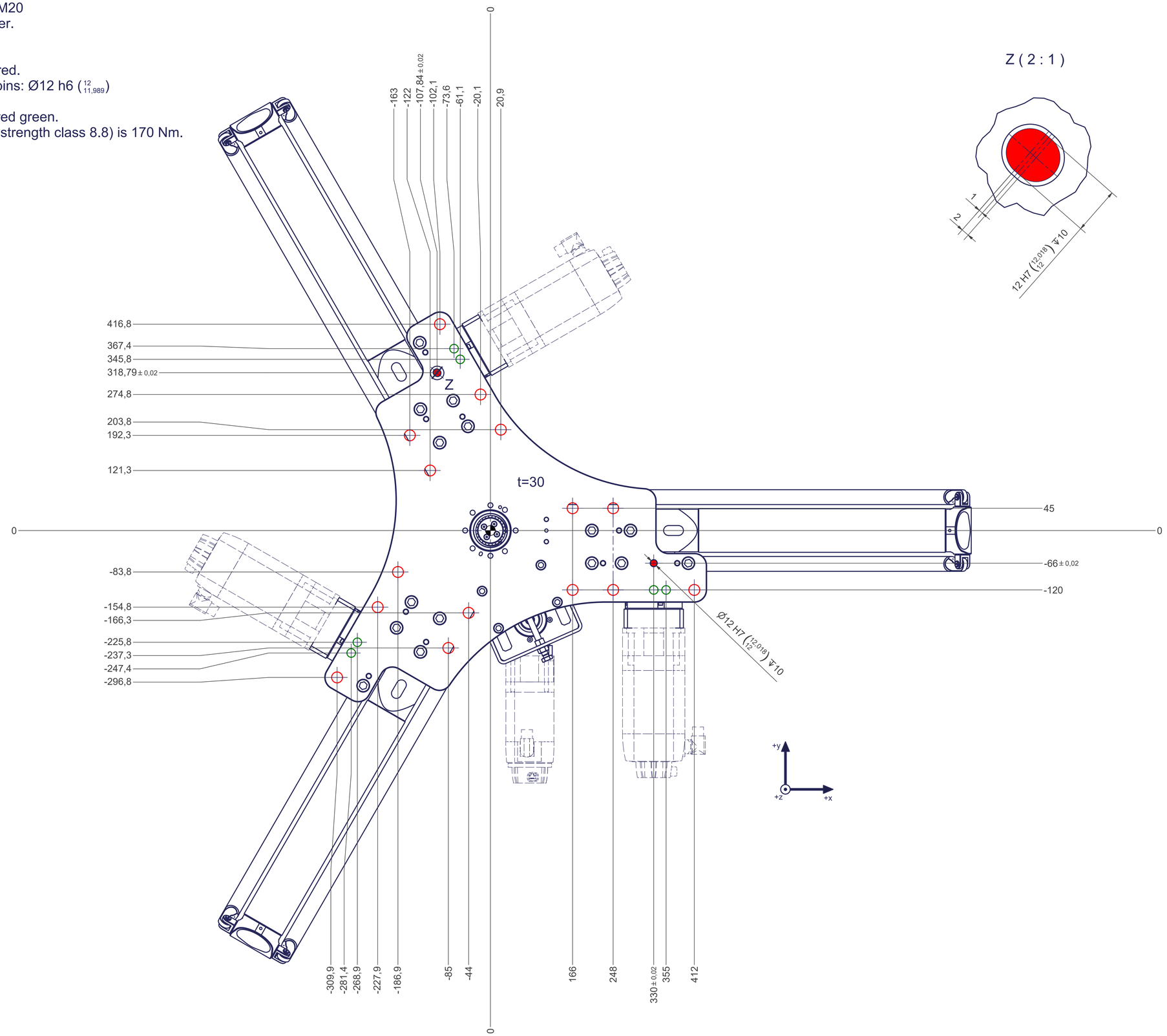
Thread holes for screws M20 are coloured green.
The tightening torque for these screws (strength class 8.8) is 170 Nm.