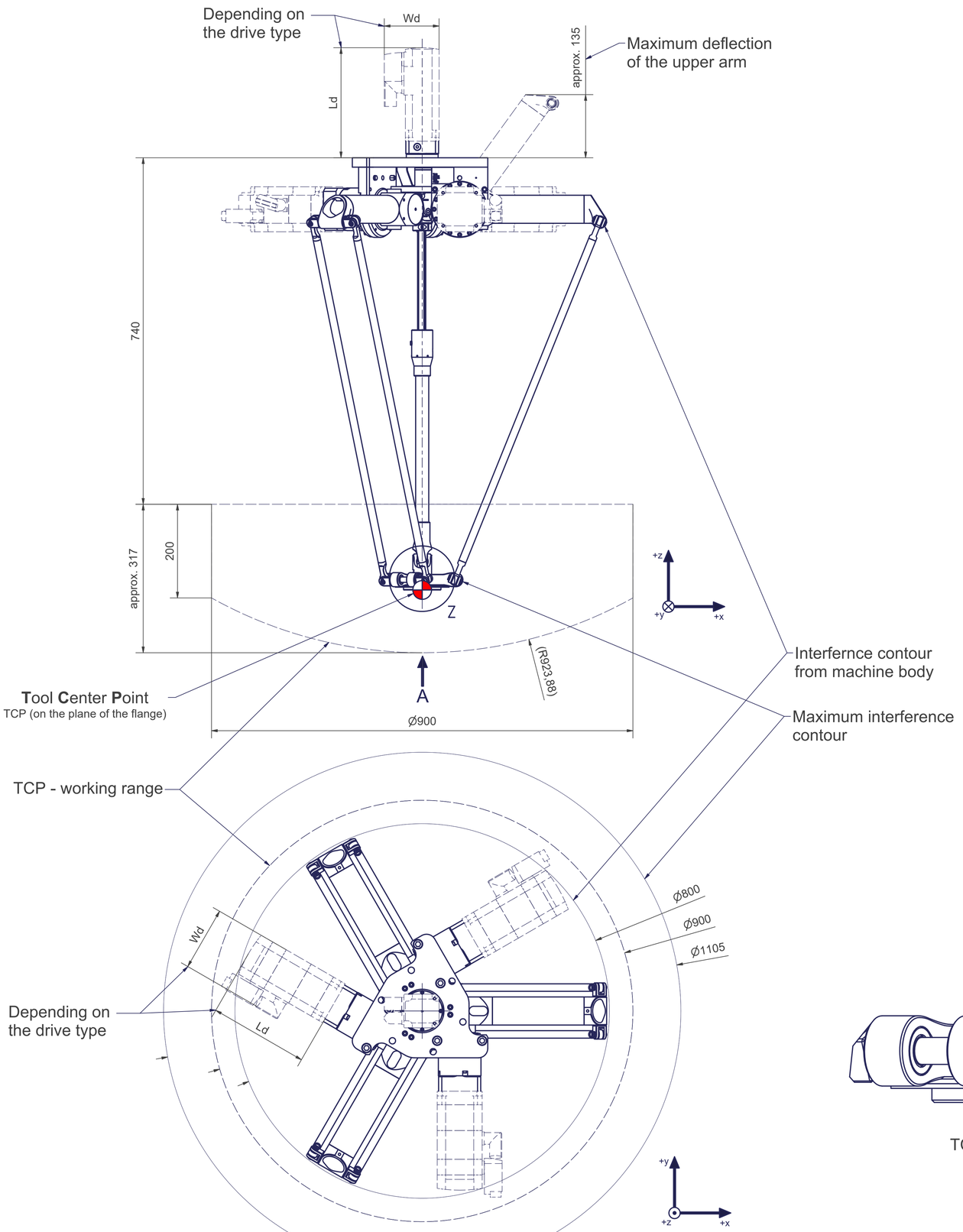

A (1 : 1)

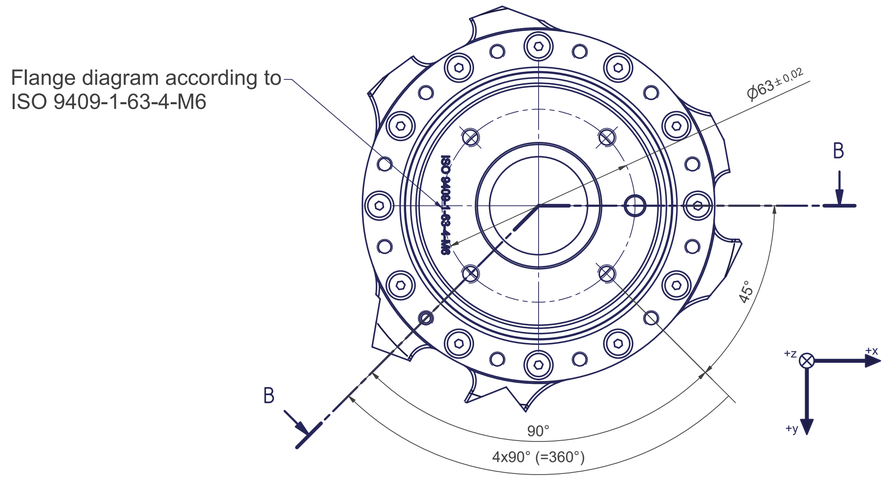

Z (1 : 1)

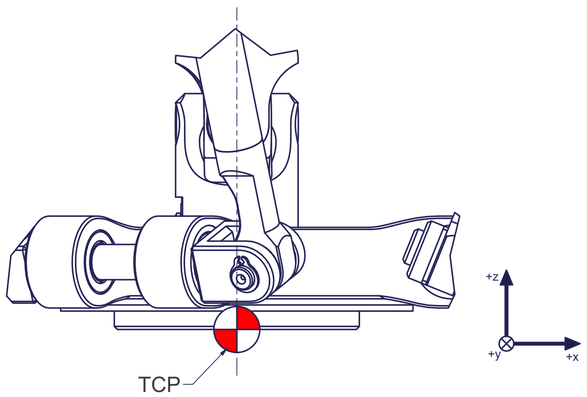

B-B

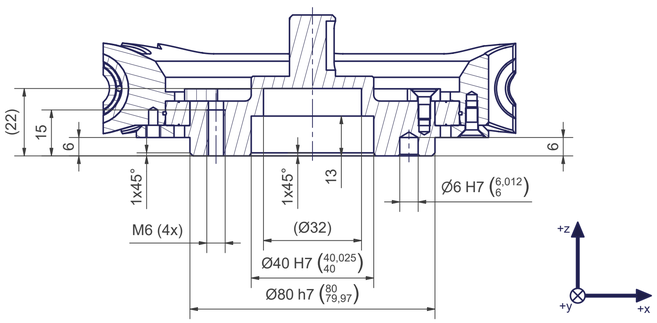

kg	
m= kg	A
proj. storage surface = m²	p= bar
First angle projection	V̂= l/min
	P= kW
	U= V / Hz / Ph
	Imax= A

autonox Robotics

A_00886

Connecting dimensions,
valid for article number A_00886

Rev_01

All fastening holes Ø13,5 mm for screws M12
(DIN 912 / ISO 4762 -8.8) without washers.
Fastening holes are coloured red.

