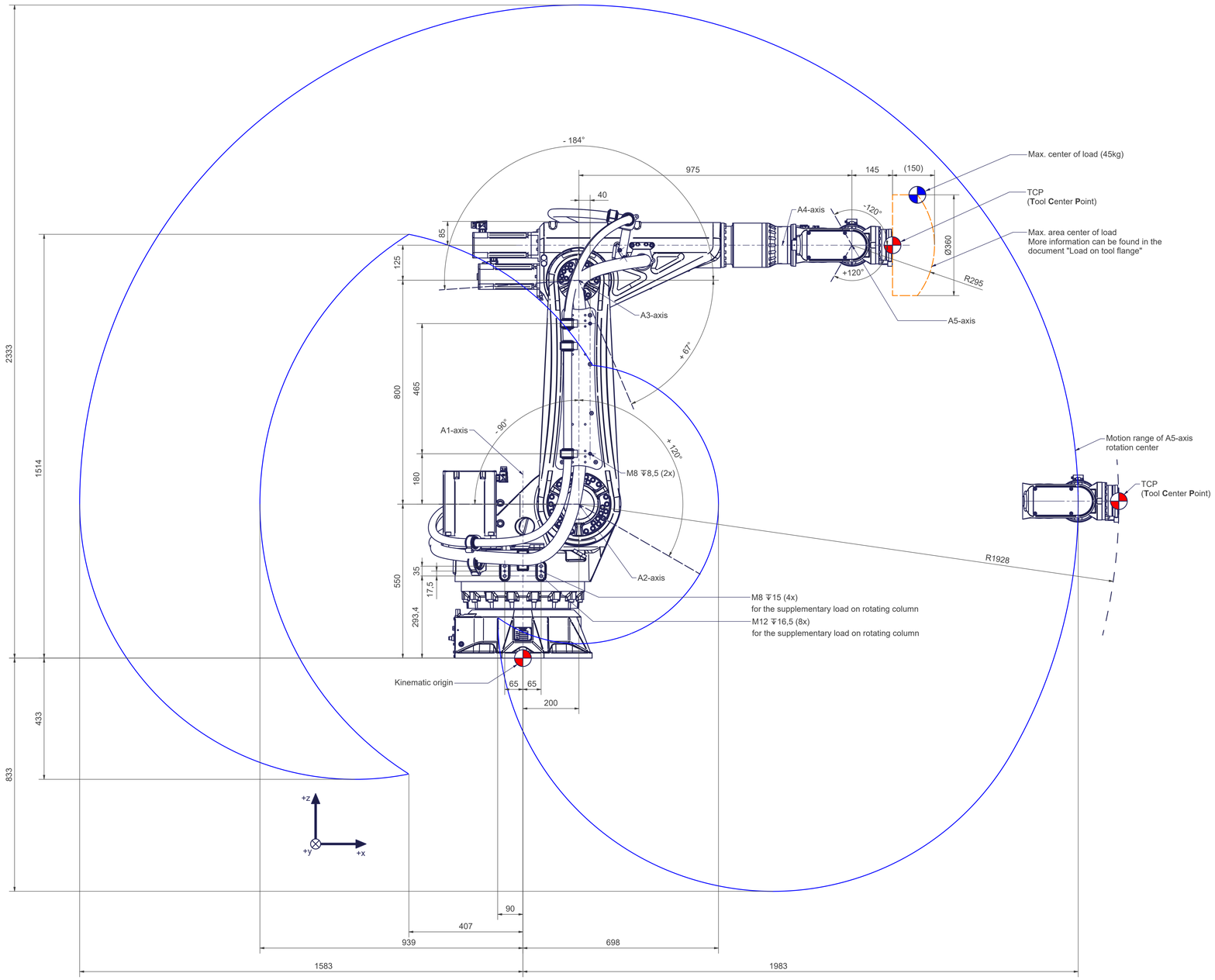

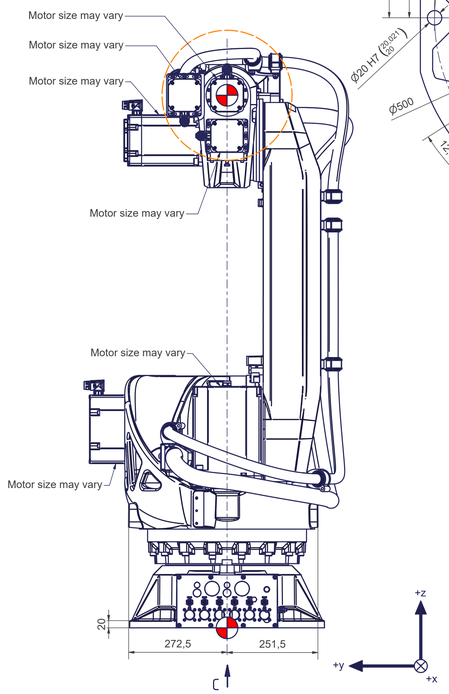

C (1 : 3)
Base frame

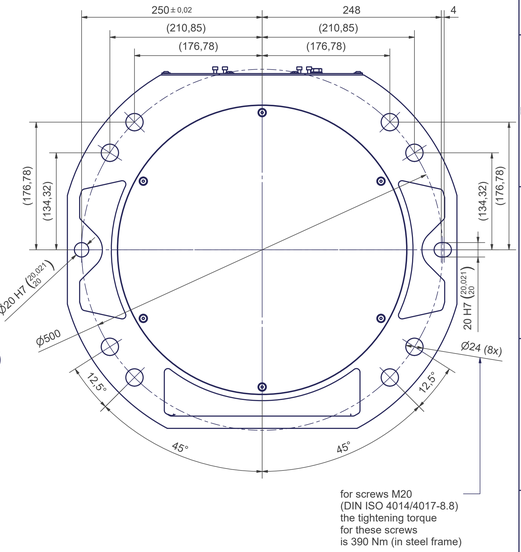

articc6-2128-45kg	
Axes	6
Payload (on TCP)	45 kg
Supplementary load on arm	40 kg
Supplementary load on rotating column	70 kg
Reach	2128 mm
Mounting position	Floor, ceiling

Motion	
Axes	Range fully usable
A1	± 185°
A2	- 90° / + 120° (*)
A3	- 184° / + 67° (*)
A4	± 180°
A5	± 120°
A6	± 360°

More information can be found in the document "calibration dimensions"

(*) only if the axis 1 motor doesn`t exceed a length of 250 mm, otherwise these values must be reduced to avoid any risk of collision

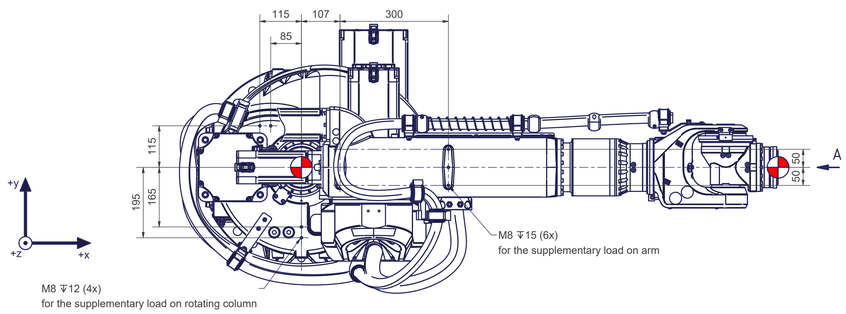

A (1 : 1)
Tool mounting flange A6

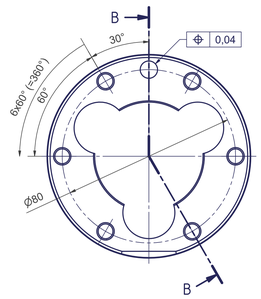

B-B

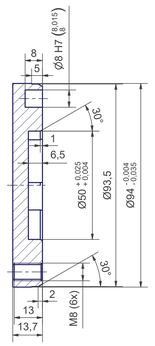

Connecting dimensions, valid for article number: AT_00010-SE01

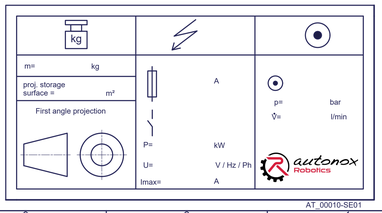

AT_00010-SE01