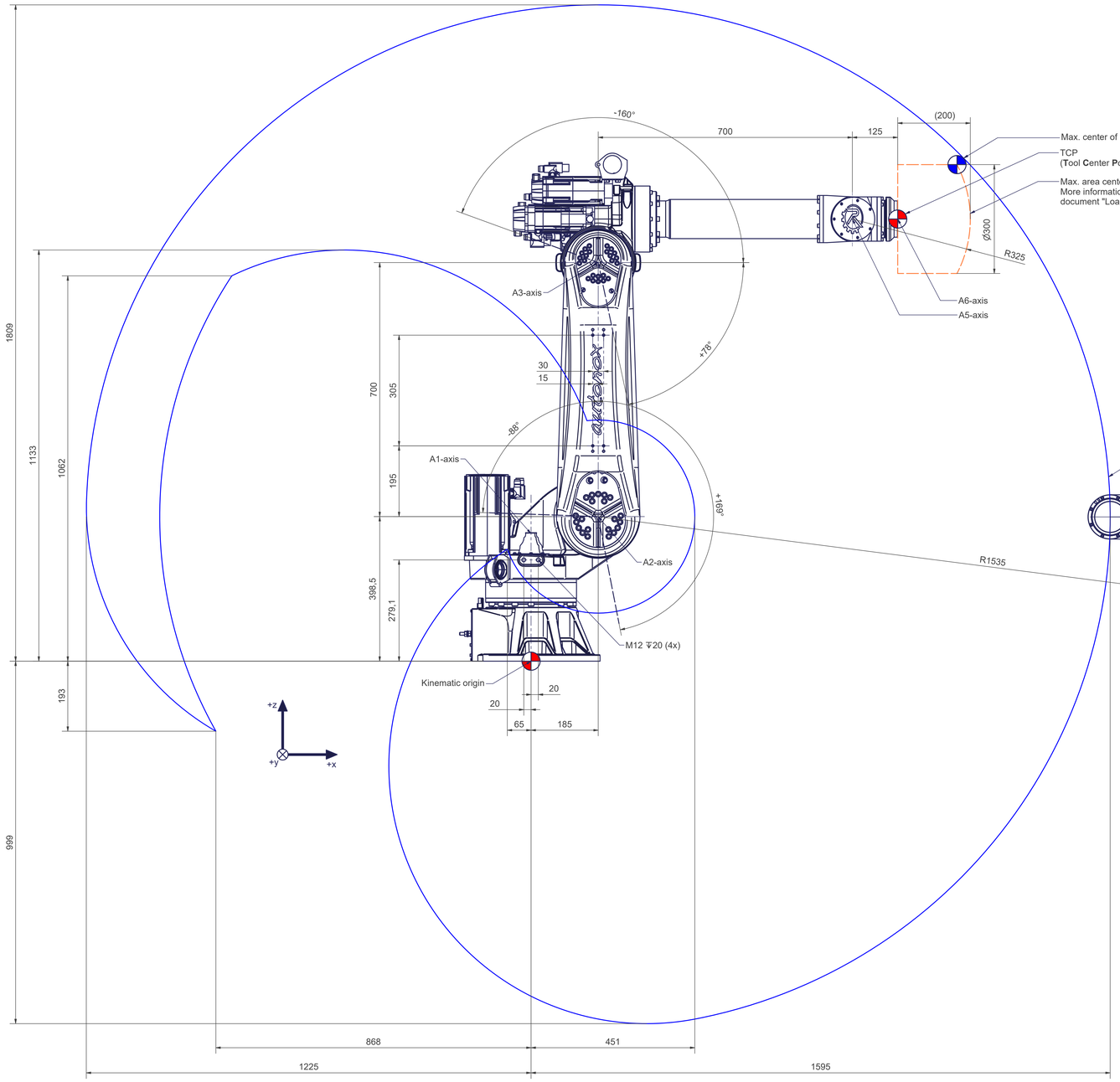

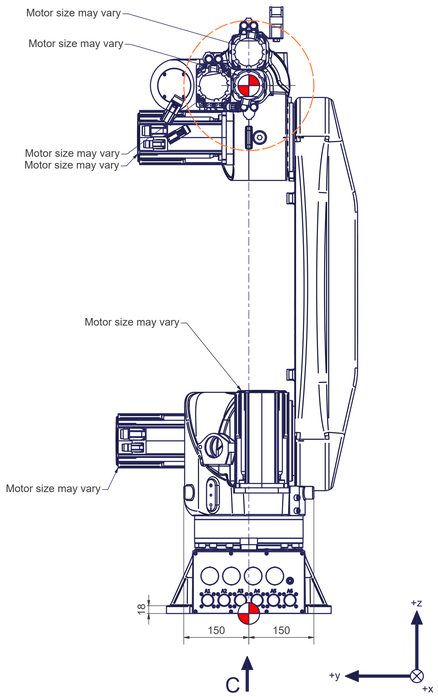

C (1 : 3)
Base frame

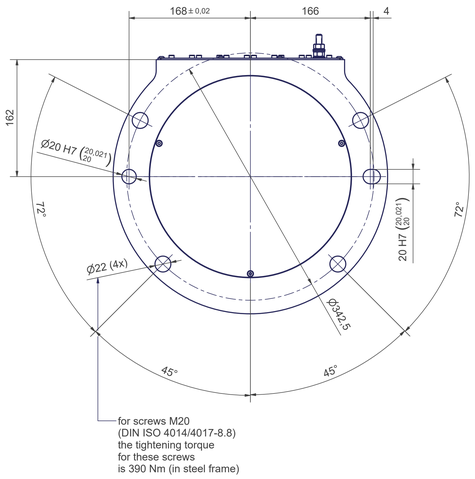

A (3 : 2)
Tool mounting flange

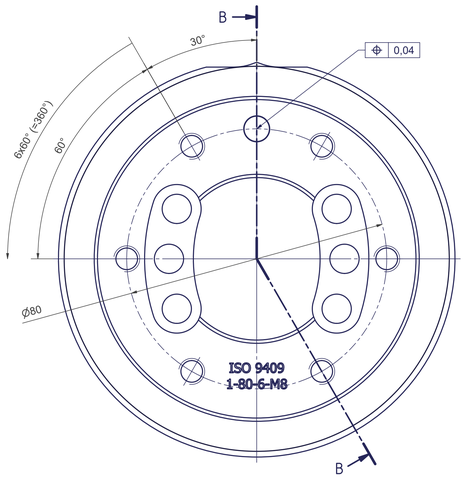

B-B

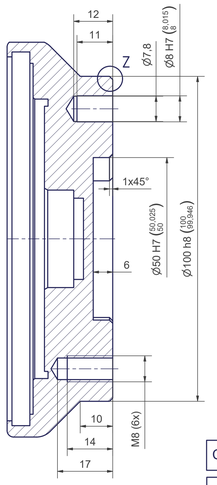

Z (5 : 1)

Motion	
Axes	Range fully usable
A1	± 185°
A2	- 88° / + 169° (*)
A3	- 160° / + 78° (*)
A4	Mechanical endless (**)
A5	Mechanical endless (**)
A6	Mechanical endless (**)

(*) More information can be found in the document "calibration dimensions".

(**) Control system dependent.

articc.o6-1720-20kg	
Axes	6
Payload (on TCP)	20 kg
Supplementary load on arm	10 kg
Reach	1720 mm
Mounting position	Angle, Ceiling, Floor, Wall

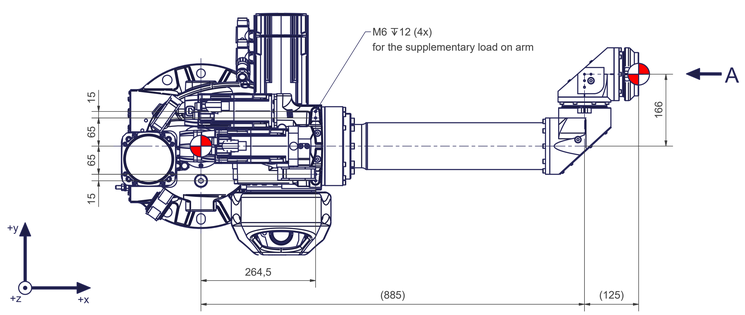

Connecting dimensions, valid for article number: AT_00031

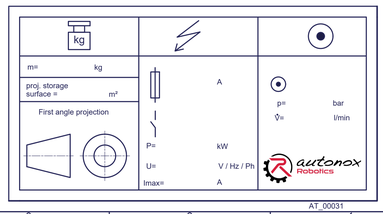

AT_00031

Rev_01