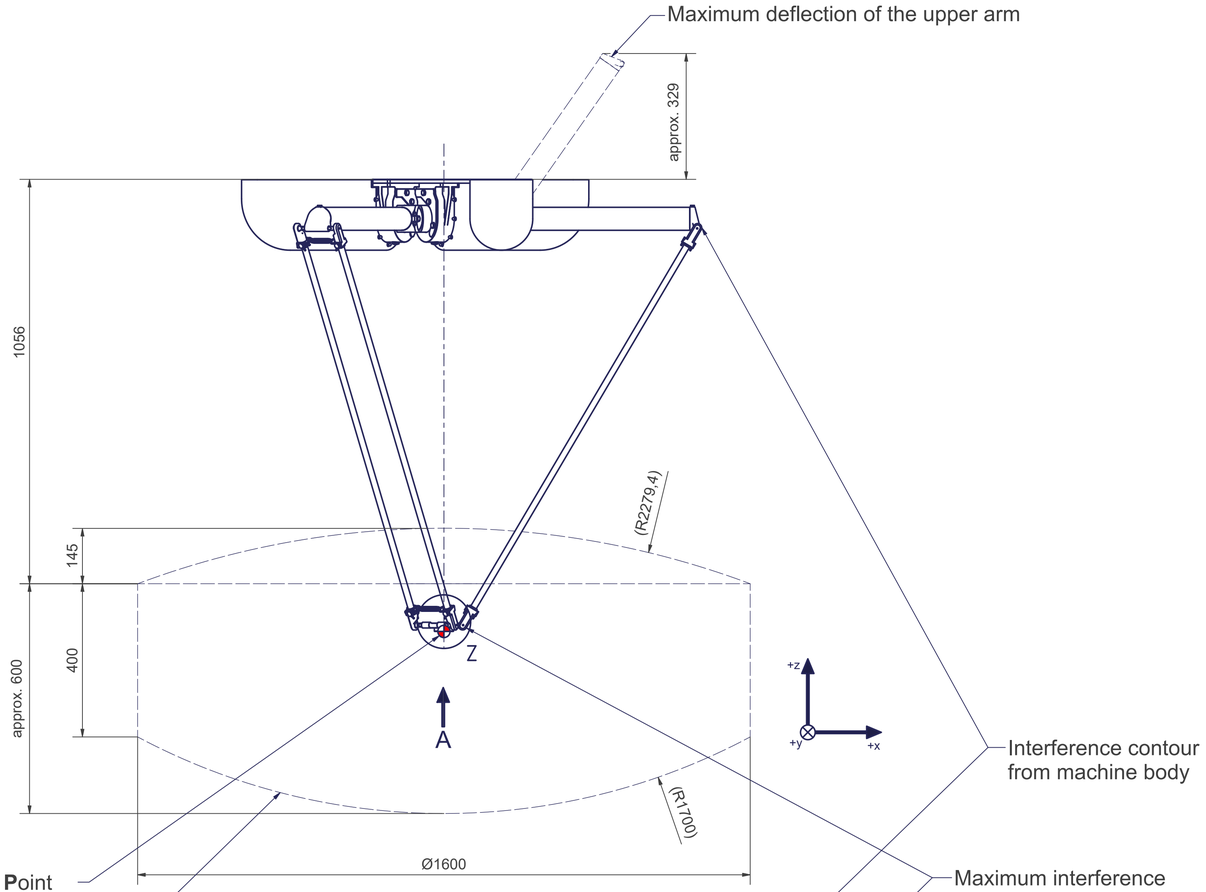

A (2 : 1)

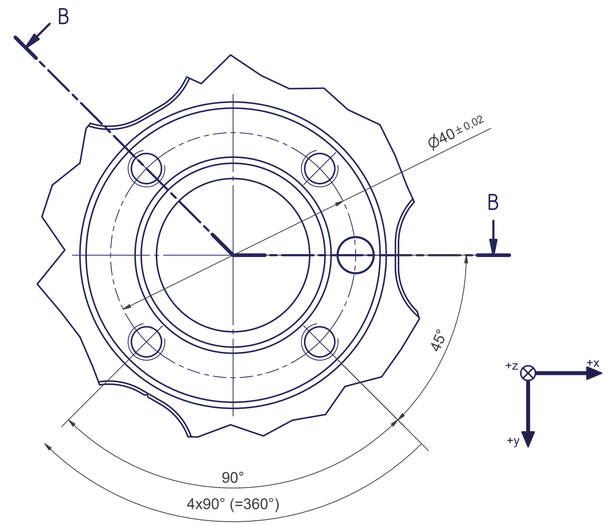

B-B

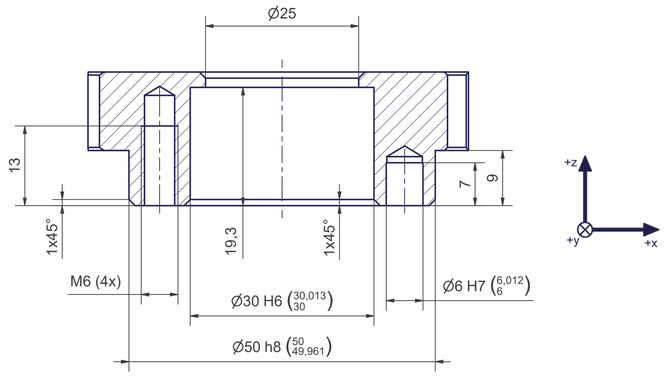

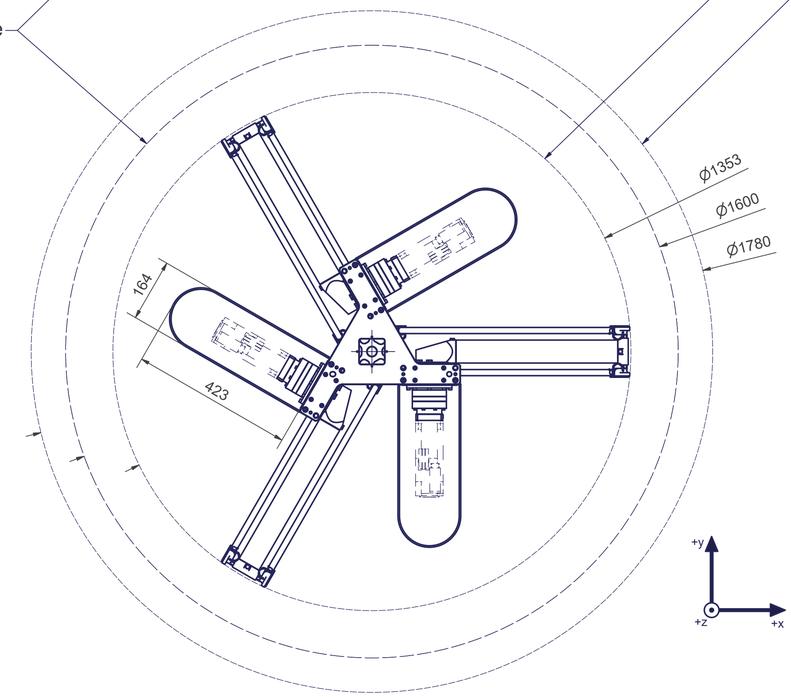

Z (1 : 1)

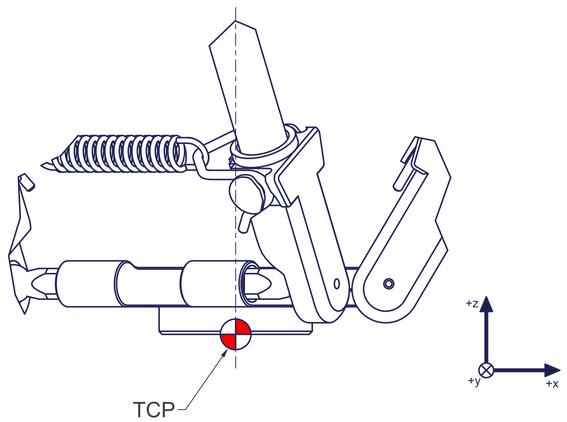

Connecting dimensions,
valid for article number AL_00007-HND

kg		
m= kg	A	
proj. storage surface = m²		p= bar
First angle projection		V̇= l/min
	P= kW	
	U= V / Hz / Ph	autonox lean line
	Imax= A	

AL_00007-HND

Thread holes for screws M12 are coloured green.
The tightening torque for these screws (strength class 8.8) is 41 Nm.

Drilling holes for location pins are filled red.
Recommended dimensions for locating pins: Ø12 h8 ($^{12}_{11,973}$)

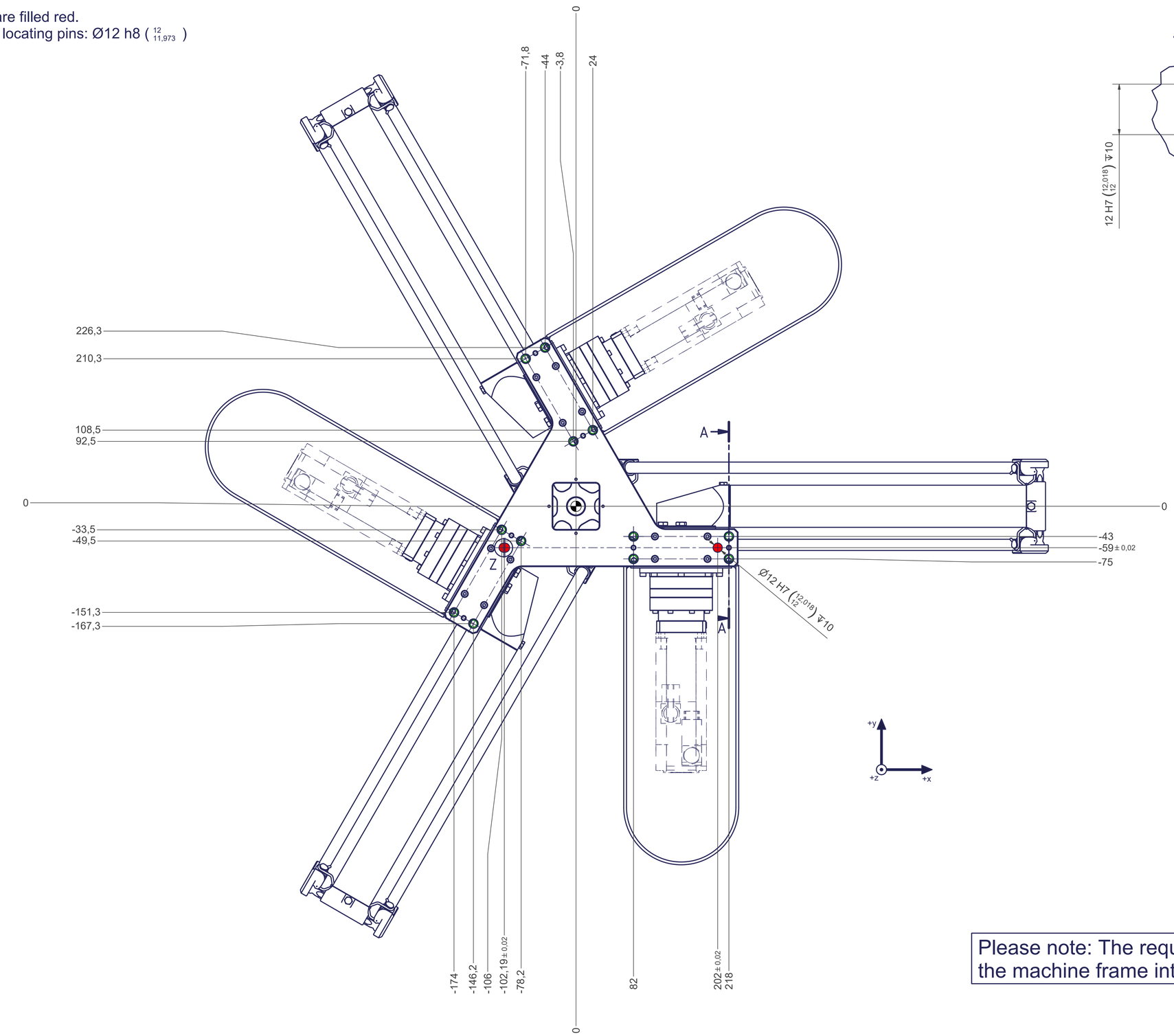

Z (2 : 1)

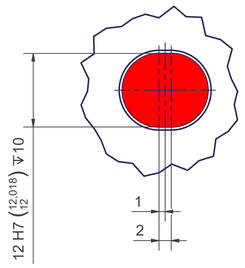

A-A (1 : 1)

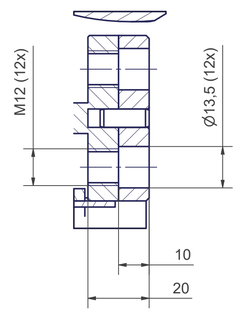

Please note: The required flatness of the machine frame interface is 0,1mm.