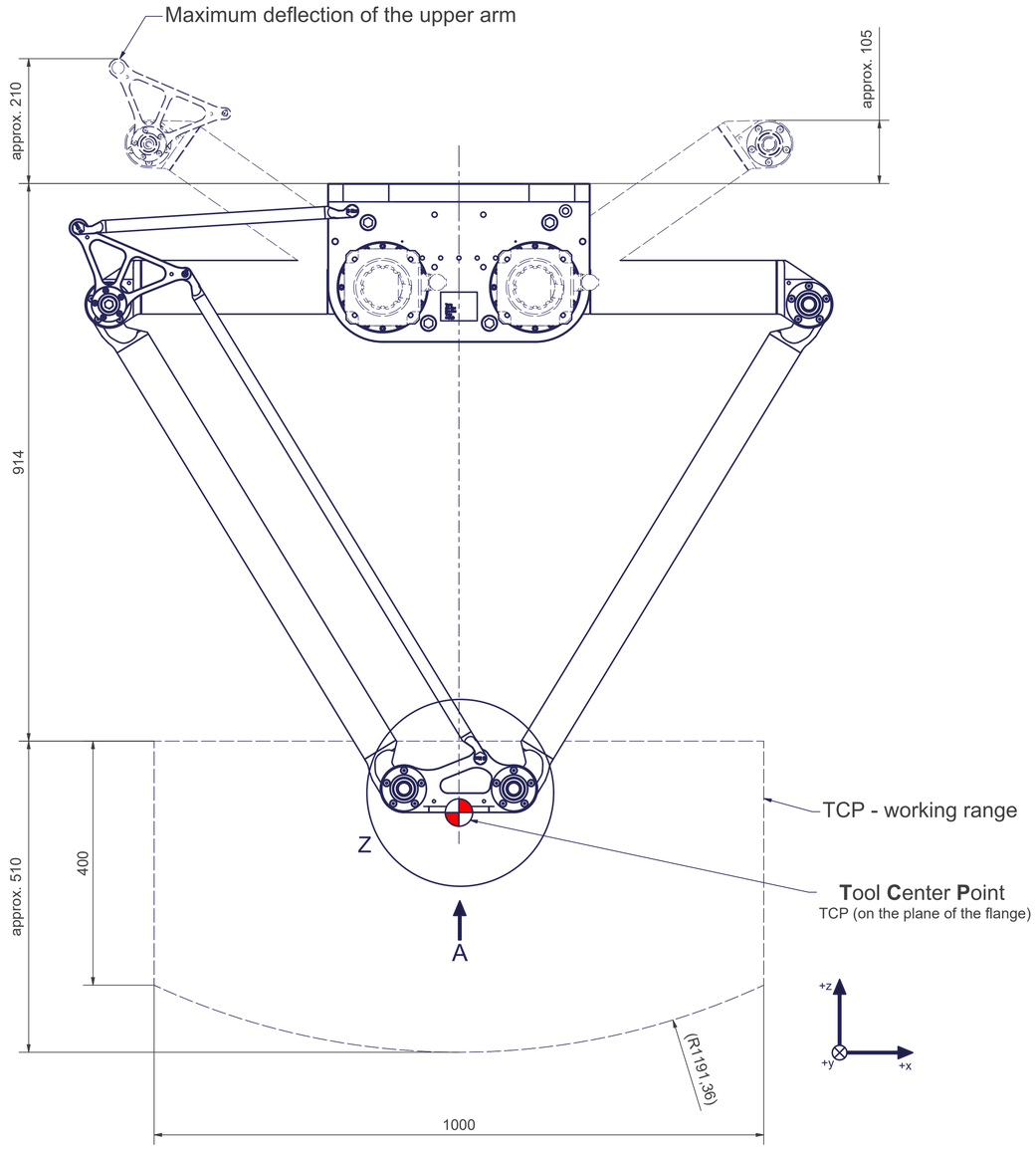

A (1 : 1)

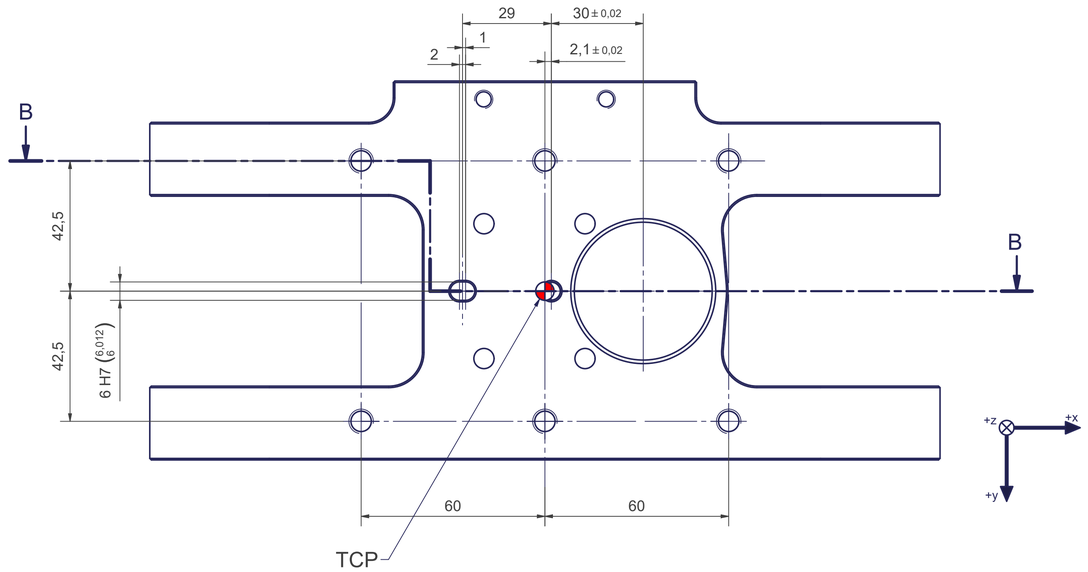

B-B

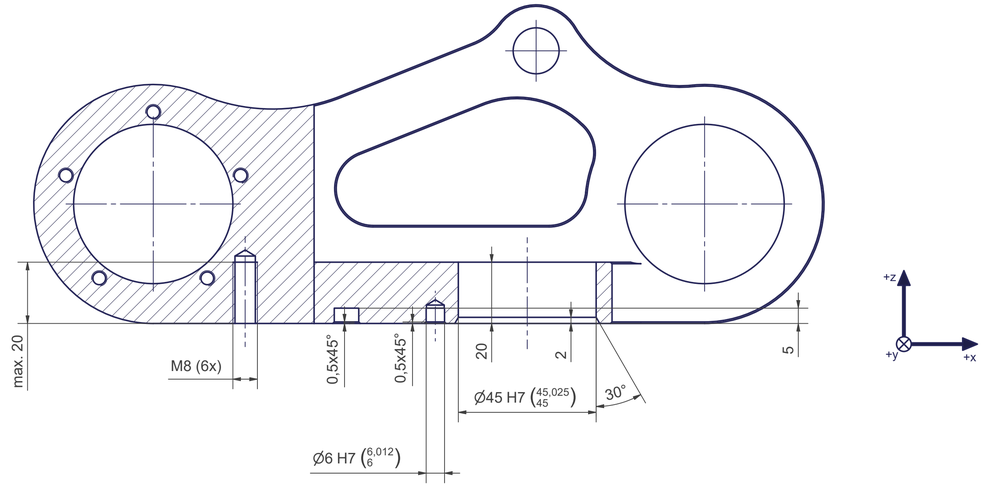

Z (1 : 2)

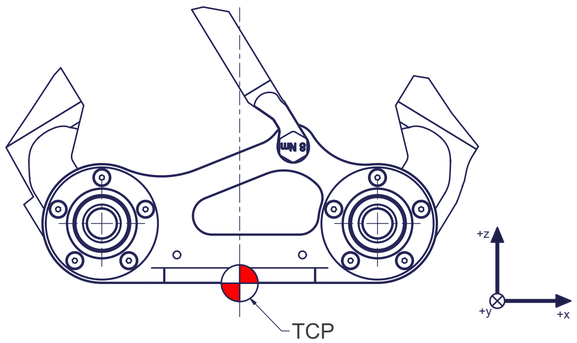

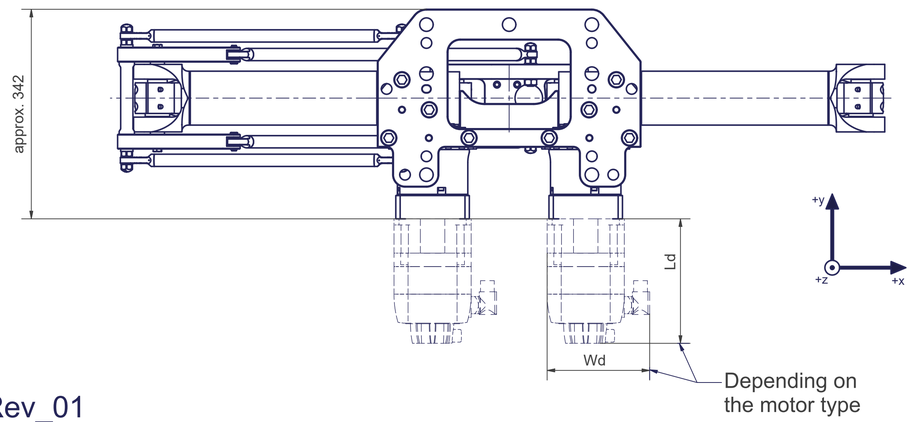

kg		
m= kg	A	
proj. storage surface = m²		p= bar
First angle projection		V̇= l/min
	P= kW	autonox Robotics
	U= V / Hz / Ph	
	Imax= A	

A_00903

Connecting dimensions,
valid for article numbers A_00903 and A_00913

Rev_01

All fastening holes Ø22 for screws M20
(DIN ISO 4014/4017 -8.8) without washer.
Fastening holes are coloured red.

Drilling holes for locating pins are filled red.
Recommended dimensions of lacating pins: Ø12 h6 ($^{12}_{11,989}$)
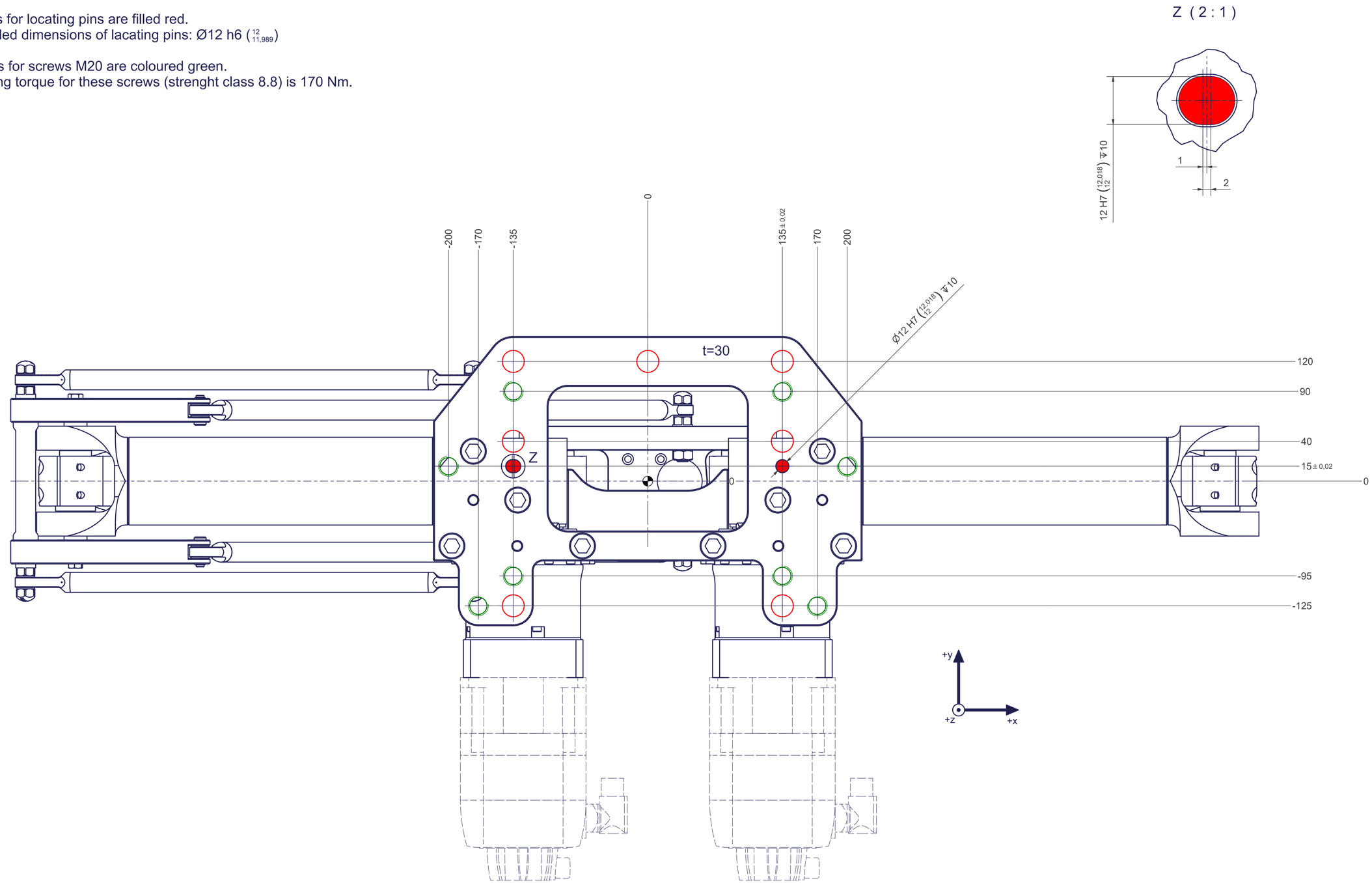
Thread holes for screws M20 are coloured green.
The tightening torque for these screws (strenght class 8.8) is 170 Nm.