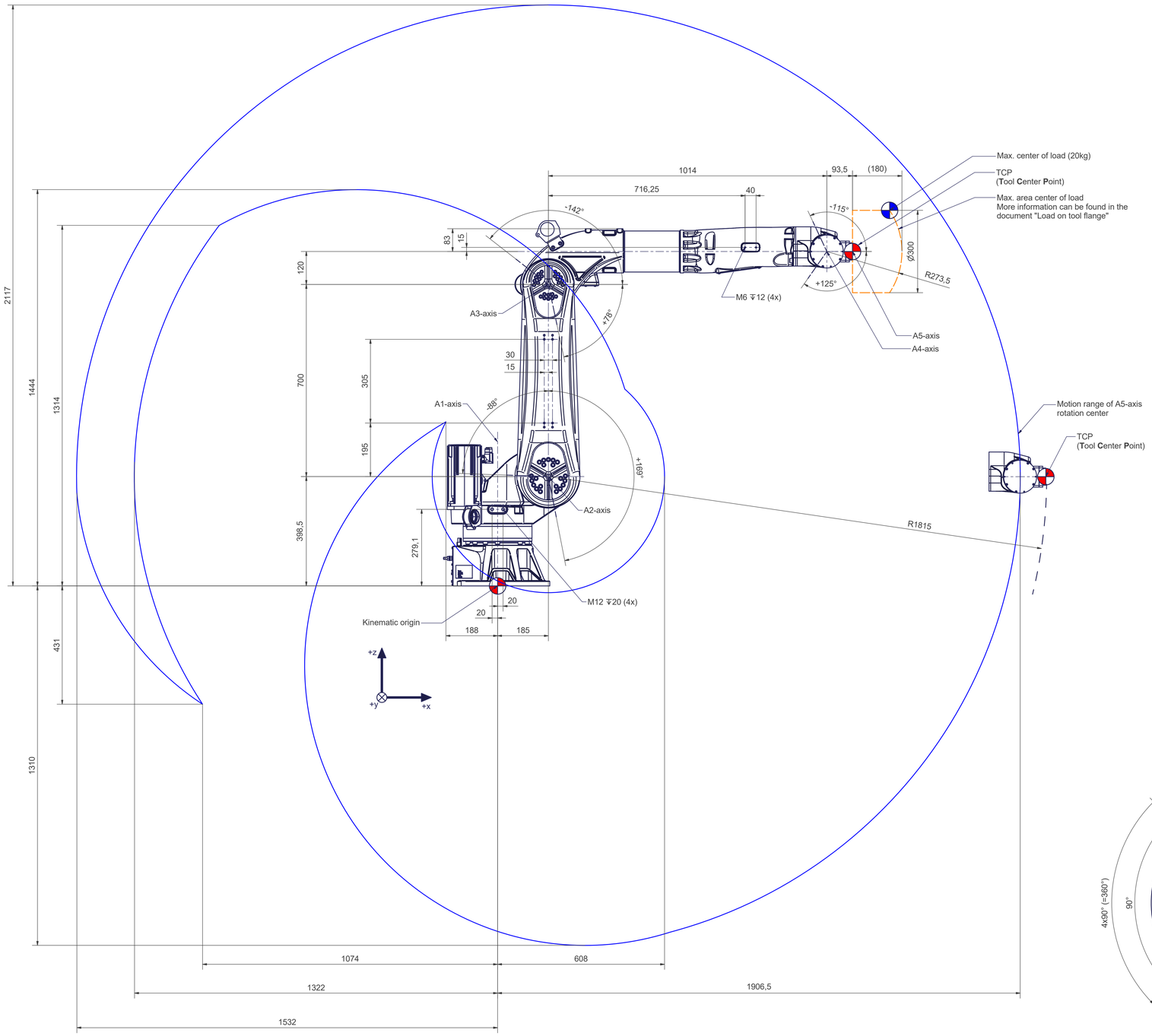

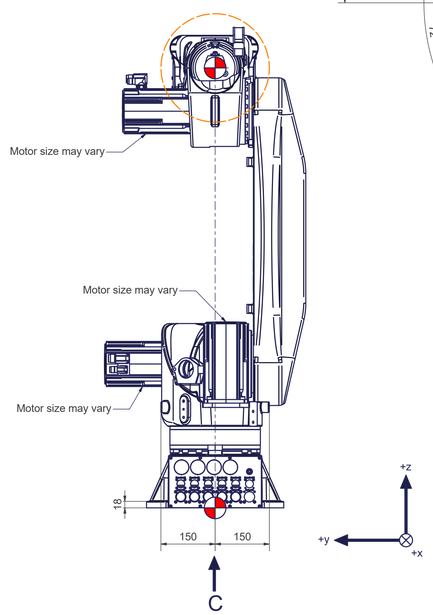

C (1 : 3)
Base frame

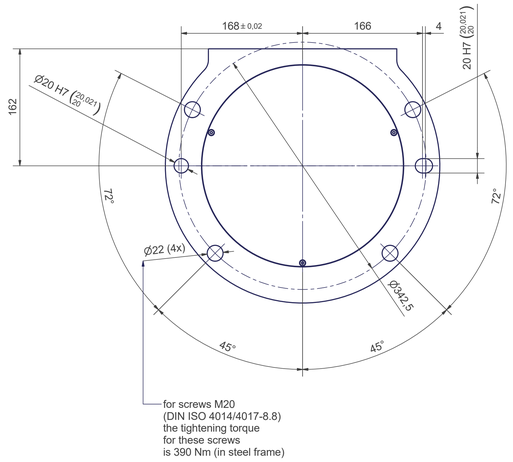

A (2 : 1)
Tool mounting flange

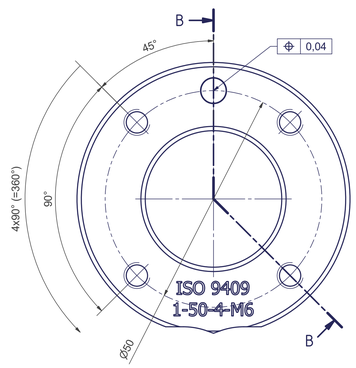

B-B

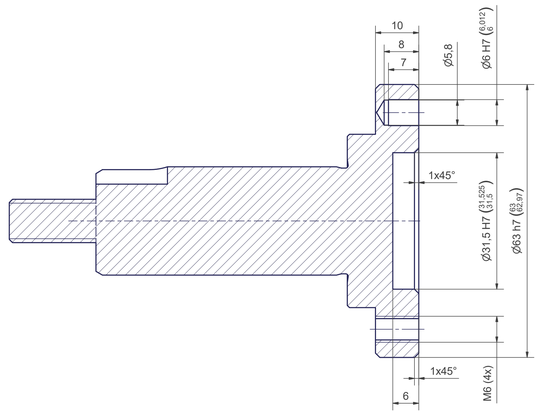

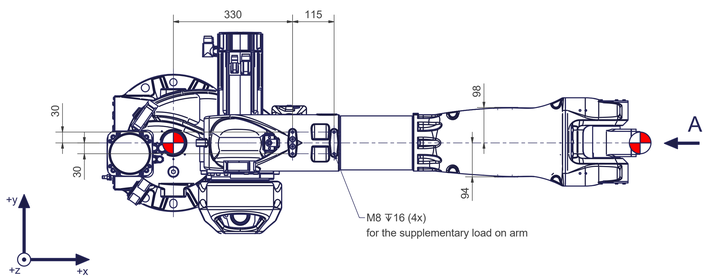

articc5-2000-20kg	
Axes	6
Payload (on TCP)	20 kg
Supplementary load on arm	10 kg
Reach	2000 mm
Mounting position	Ceiling, Floor

Motion	
Axes	Range fully usable
A1	± 185°
A2	- 88° / + 169°
A3	- 142° / + 78°
A4	± 185°
A5	- 115° / + 125°

Connecting dimensions, valid for article number: AT_50030

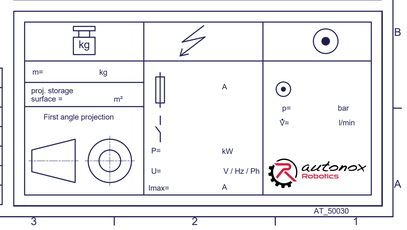

AT_50030