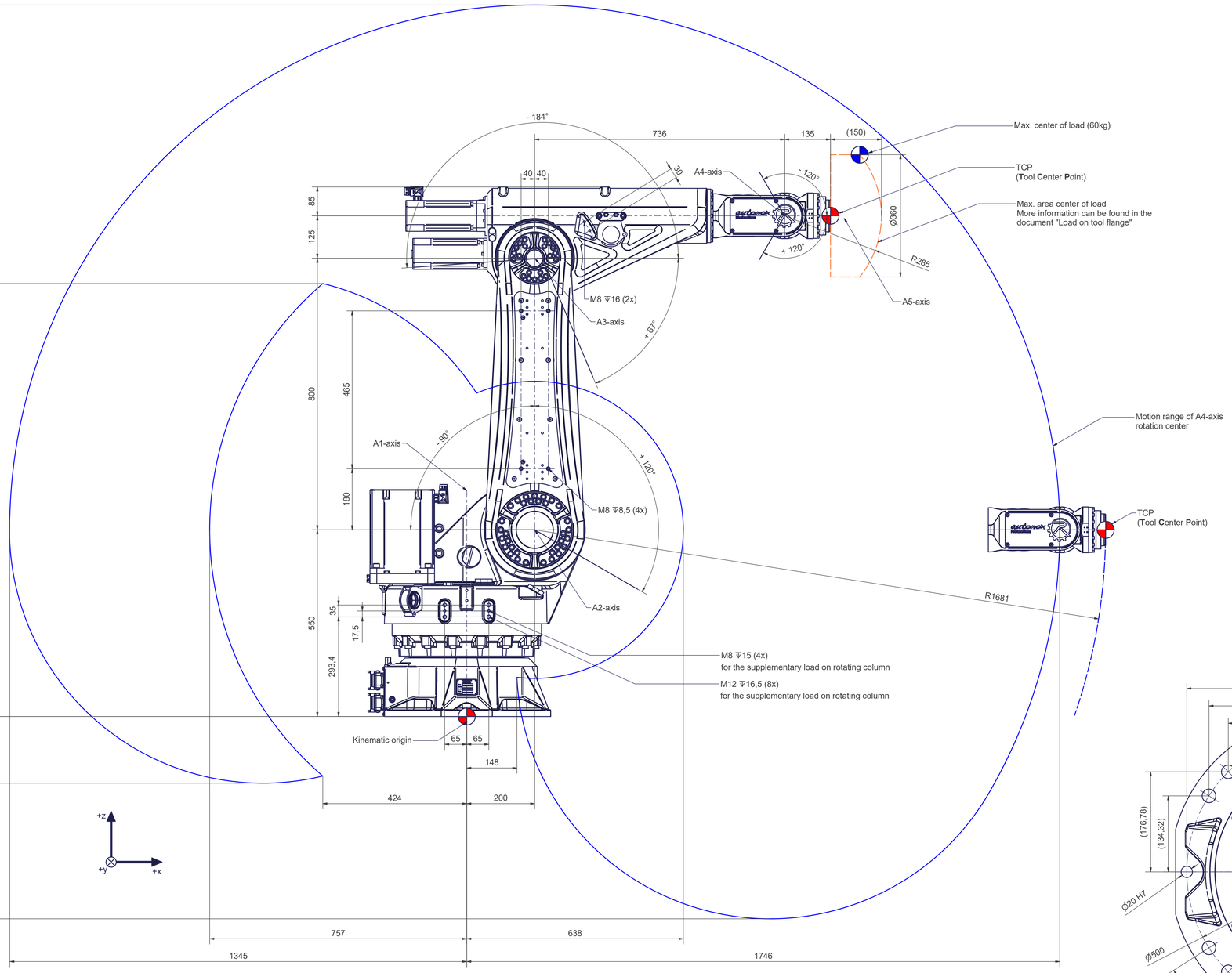

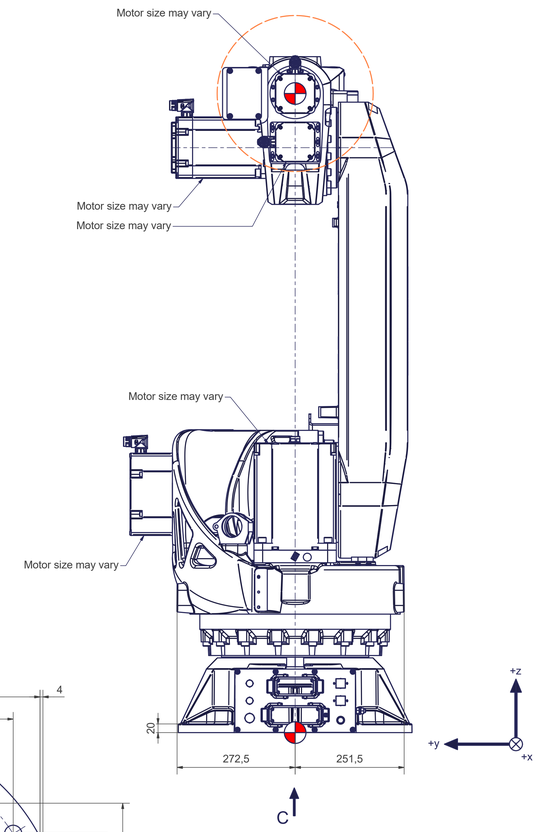

C (1 : 3)
Base frame

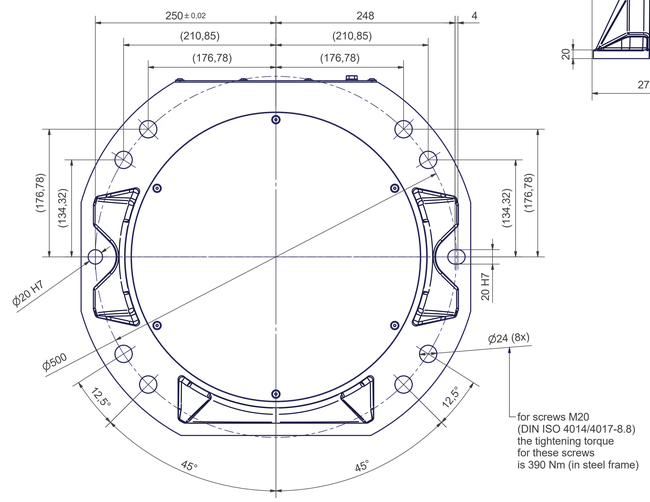

articc5-1881-60kg	
Axes	5
Payload (on TCP)	60 kg
Supplementary load on arm	40 kg
Supplementary load on rotating column	70 kg
Reach	1881 mm
Mounting position	Floor, ceiling

Motion	
Axes	Range fully usable
A1	± 185°
A2	- 90° / + 120° (*)
A3	- 184° / + 67° (*)
A4	± 120°
A5	± 360°

More information can be found in the document "calibration dimensions"

(*) only if the axis 1 motor doesn't exceed a length of 250 mm, otherwise these values must be reduced to avoid any risk of collision

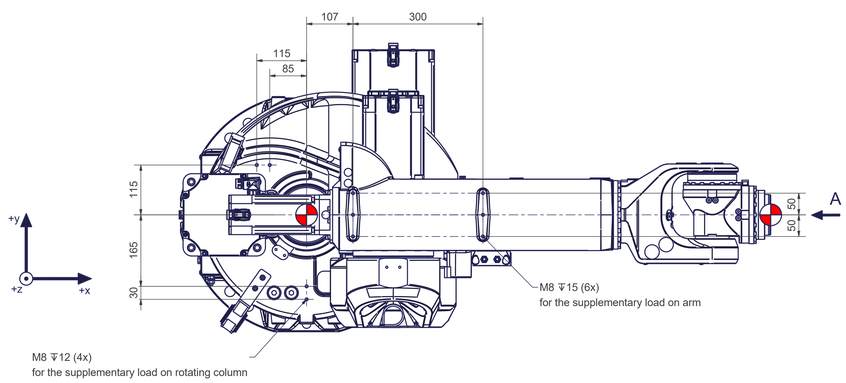

A (1 : 1)
Tool mounting flange A5

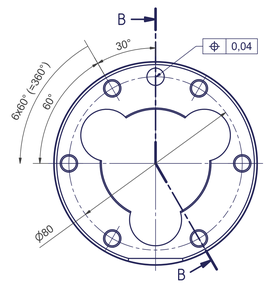

B-B

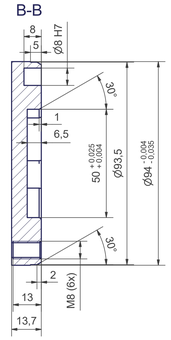

Connecting dimensions, valid for article number: AT_50005

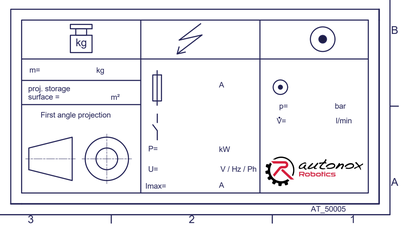

AT_50005