A minimum distance of 100mm between the cable harness and any (machine)parts is recommended to avoid any collision

Optional Bellows (1 : 1)

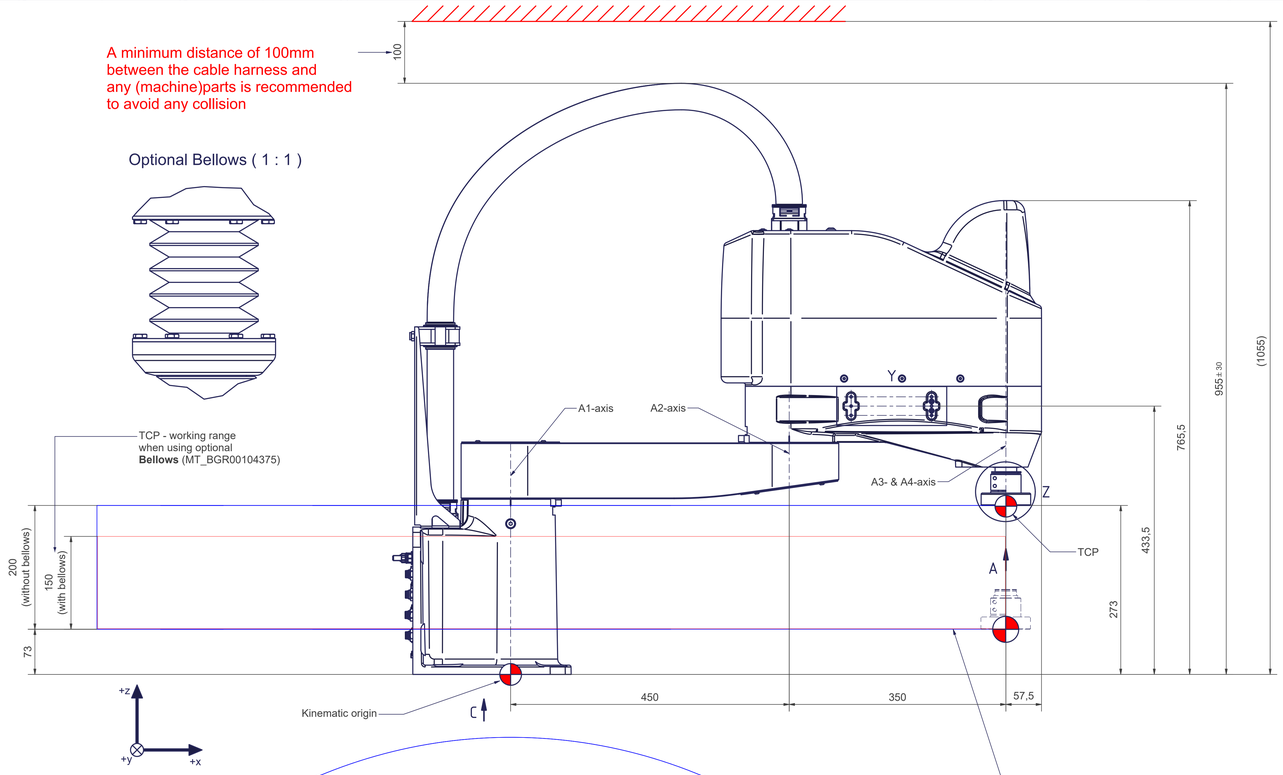

A (2 : 1)
Tool mounting flange

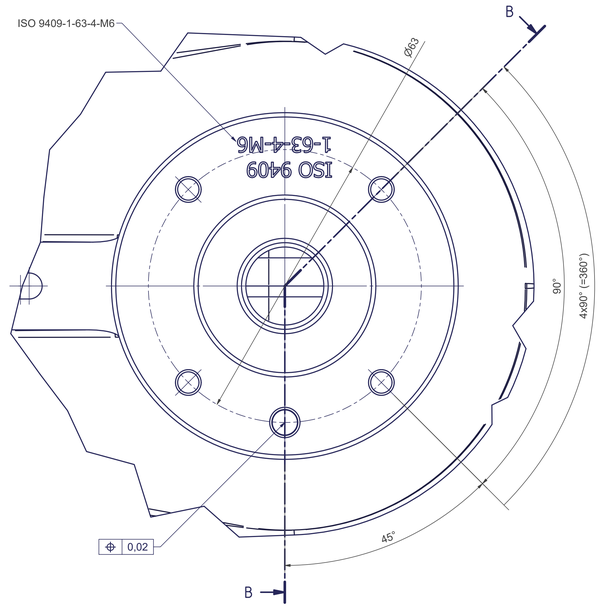

B-B

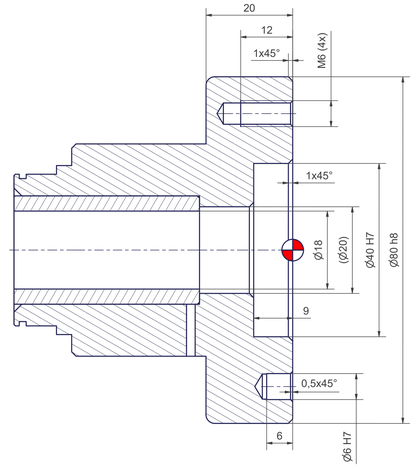

Y (1 : 2)

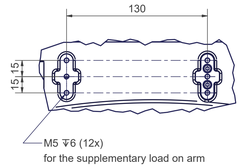

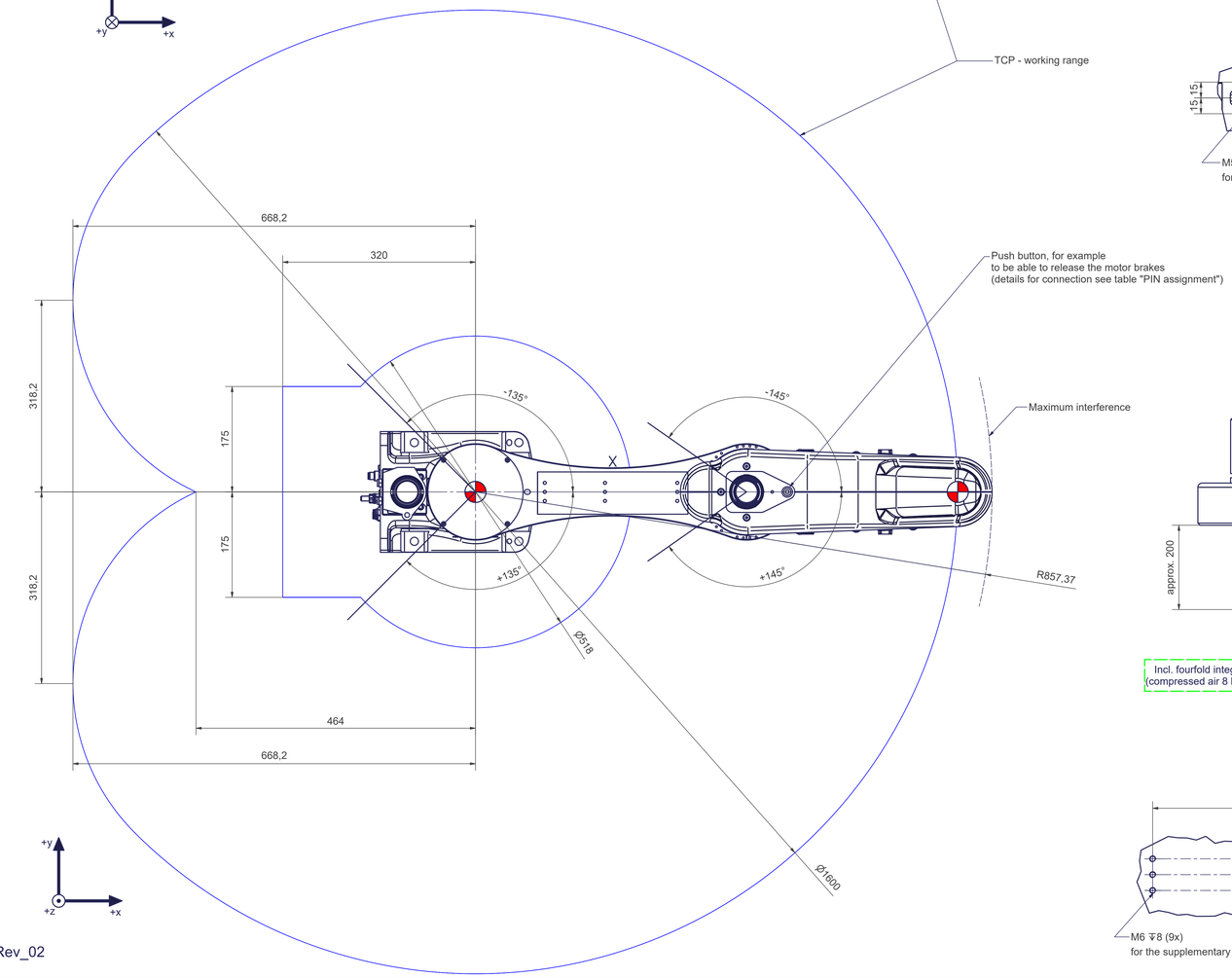

Z (1 : 1)

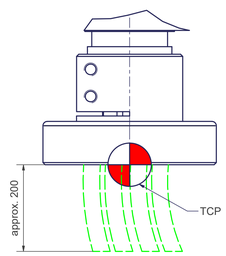

Incl. fourfold integrated media supply to the end effector
(compressed air 8 bar / vacuum -1 bar / D = 6mm d = 4mm)

X (1 : 2)

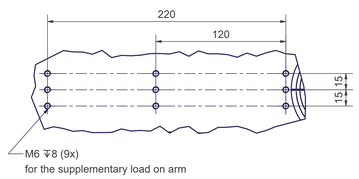

C (1 : 2)
Base Frame

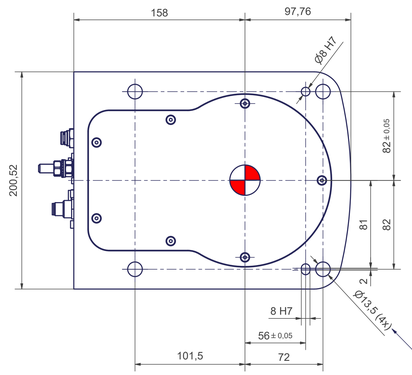

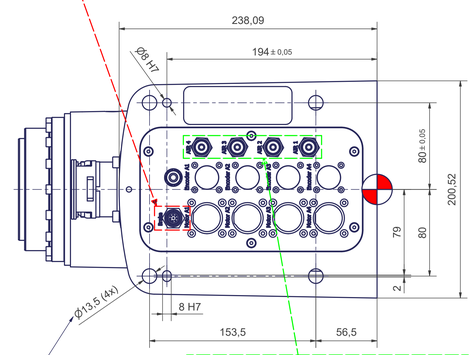

Incl. fourfold integrated media supply to the end effector
(compressed air 8 bar / vacuum -1 bar / D = 6mm d = 4mm)

for screws M12
(DIN ISO 4014/4017-8.8)
the tightening torque
for these screws
is 83 Nm (in steel frame).

PIN assignment by autonox Robotics

PIN number	Connection to	M12 8-pin male
1	Push button	
2	Push button	
3 to 8	Not connected	

sCara4-800-6kg	
Axes	4
Payload (on TCP)	6kg
Reach	800 mm
Mounting position	Floor, ceiling, wall

Motion	
Axes	Range fully usable
A1	± 135°
A2	± 145°
A3	+ 73 mm / + 273 mm
A4	± 360°

More information can be found in
the document "calibration dimensions"

Connecting dimensions, valid for article number: AT_00024

OPTIONAL:

Bellows MT_BGR00104375

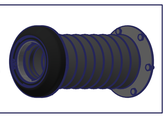

kg		
m= kg	A	p= bar
proj. storage surface = m²	P= kW	V= l/min
	U= V / Hz / Ph	autonox Robotics
	Imax= A	

Rev_02

AT_00024