DuoPod RVS4-750-3kg

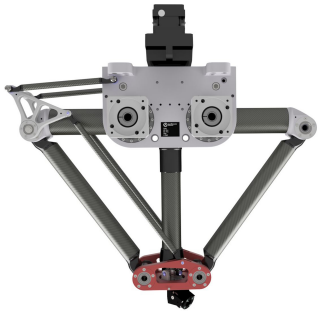

Article number: A_00917-FO

Lubricant variant: Food-grade lubricants (FO)

Description:

This type of robot is based on the principle of parallel kinematics. All drives are mounted in a fixed position on the robot head. Motor cables are not moved. The robot has two (2) translational and one (1) rotational degree(s) of freedom.

Scope of delivery:

Robot mechanics incl. gearbox, Servo motor adapter, Threaded protection caps , Transport and packing instructions

Connecting dimensions:

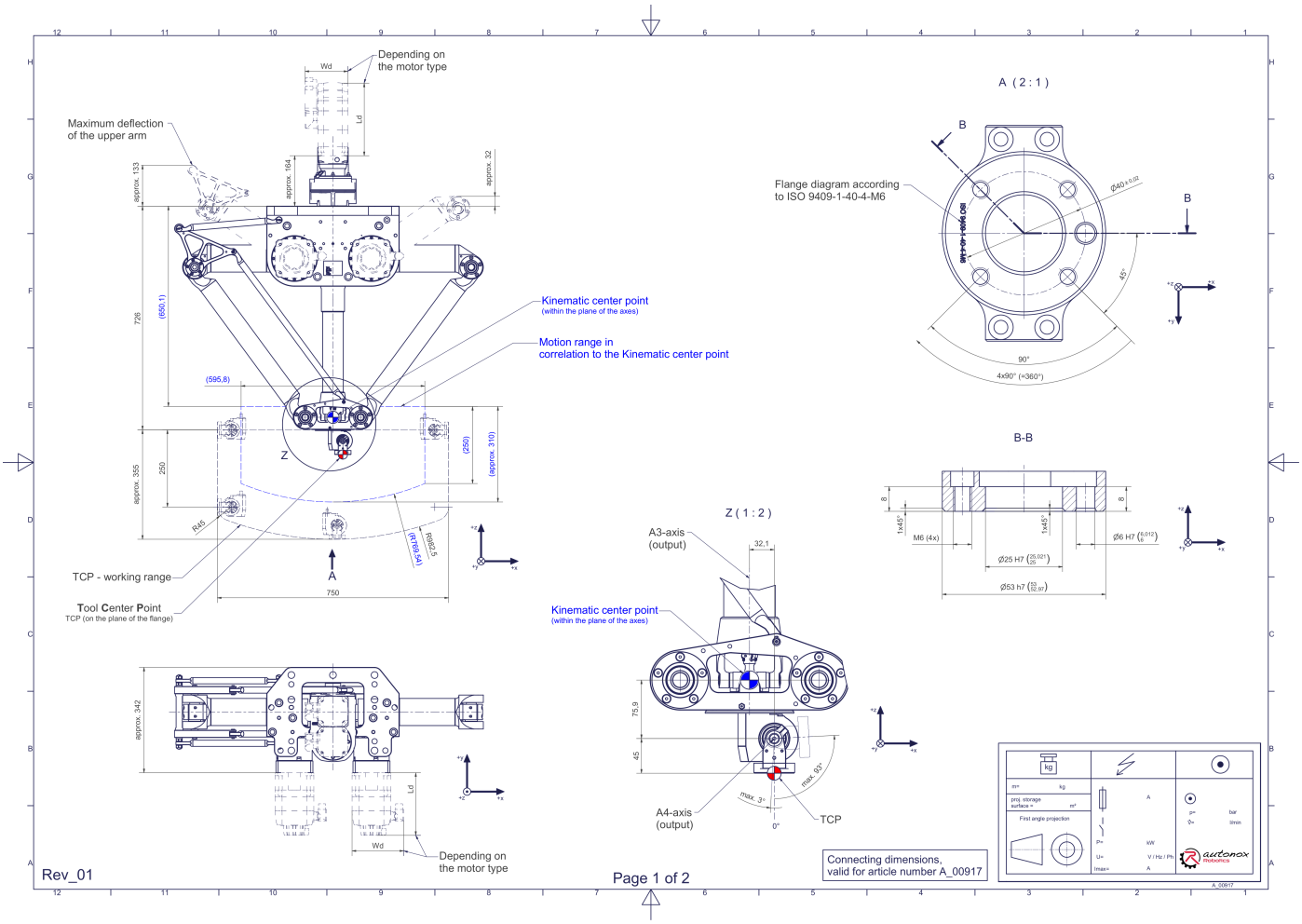

Downloads: Connecting dimensions (PDF) 3D model (STP) 3D model (PDF)

We refer to our General Terms of Sale and Supply and Terms of Use.

© 2026 autonox Robotics GmbH | www.autonox.com

Technical specifications:

Field of application	Standard (not hygienic)
Kinematics	Parallel
Translatory Degrees of Freedom (X,Y,Z)	2
Rotational Degrees of Freedom (α,ß,γ)	2
Nominal payload [kg|lbs] *	3 | 6.6
Working area-width [mm|in]	750 | 29.5
Working height outside [mm|in]	250 | 9.8
Working height center [mm|in]	355 | 14.0
Max. acceleration torque of the rotation α/β around X/Y at the output [Nm|in.lbs]	16 | 141.6
Nominal torque of the rotation α/β around X/Y at the output [Nm|in.lbs]	16 | 141.6
Max. speed of the rotation α/β around X/Y at the output [1/min]	82
Nominal speed of the rotation α/β around X/Y at the output [1/min]	82
Max. acceleration torque of the rotation γ around Z at the output [Nm|in.lbs]	40 | 354.0
Nominal torque of the rotation γ around Z at the output [Nm|in.lbs]	40 | 354.0
Max. speed of the rotation γ around Z at the output [1/min]	260
Nominal speed of the rotation γ around Z at the output [1/min]	160
Bearing type of the telescopic shaft(s)	Roller bearing
Bearing type of the arm joints	Roller bearing
Lubricants of the bearings	Food-grade (FO)
Lubricants of the gearboxes	Food-grade (FO)
Cleaning	No high pressure
Ambient temperature [°C|°F]	0 to +40 | +32 to +104
Relative humidity level [%]	95 (free of condensation)
Mounting position	Floor, Ceiling, Wall (on request), Angle (on request)
Robot weight without drive engineering (esp. motors) [kg|lbs]	66 | 145.5

* All given values are nominal values (nominal payload referred to a nominal performance) and can vary under realworld conditions depending on the application (tool specifications, load distances, reduction (partly) of the nominal performance when using food-grade lubricants, ...). Please consider our technical data sheets regarding the load capacity.

Gearbox article number for this robot mechanics:

Function	Article number	Document
Drive of the upper arms	MT_BGR00102242-xx-FO	Operating manual gearbox type 3 (PDF)
Drive of the telescopic shaft for rotation γ around Z	MT_WST00112739-xx-FO	Operating manual gearbox type 7 (PDF)

We refer to our General Terms of Sale and Supply and Terms of Use.

© 2026 autonox Robotics GmbH | www.autonox.com