DELTA RLE4-900-3kg



Article number: A_00886-FO

Lubricant variant: Food-grade lubricants (FO)

Description:
This type of robot is based on the principle of parallel kinematics. All drives are mounted in a fixed position on the robot head. Motor cables are not moved. The robot has three (3) translational and one (1) rotational degree(s) of freedom.

Scope of delivery:
Robot mechanics incl. gearbox, Servo motor adapter, Threaded protection caps , Transport and packing instructions

Connecting dimensions:

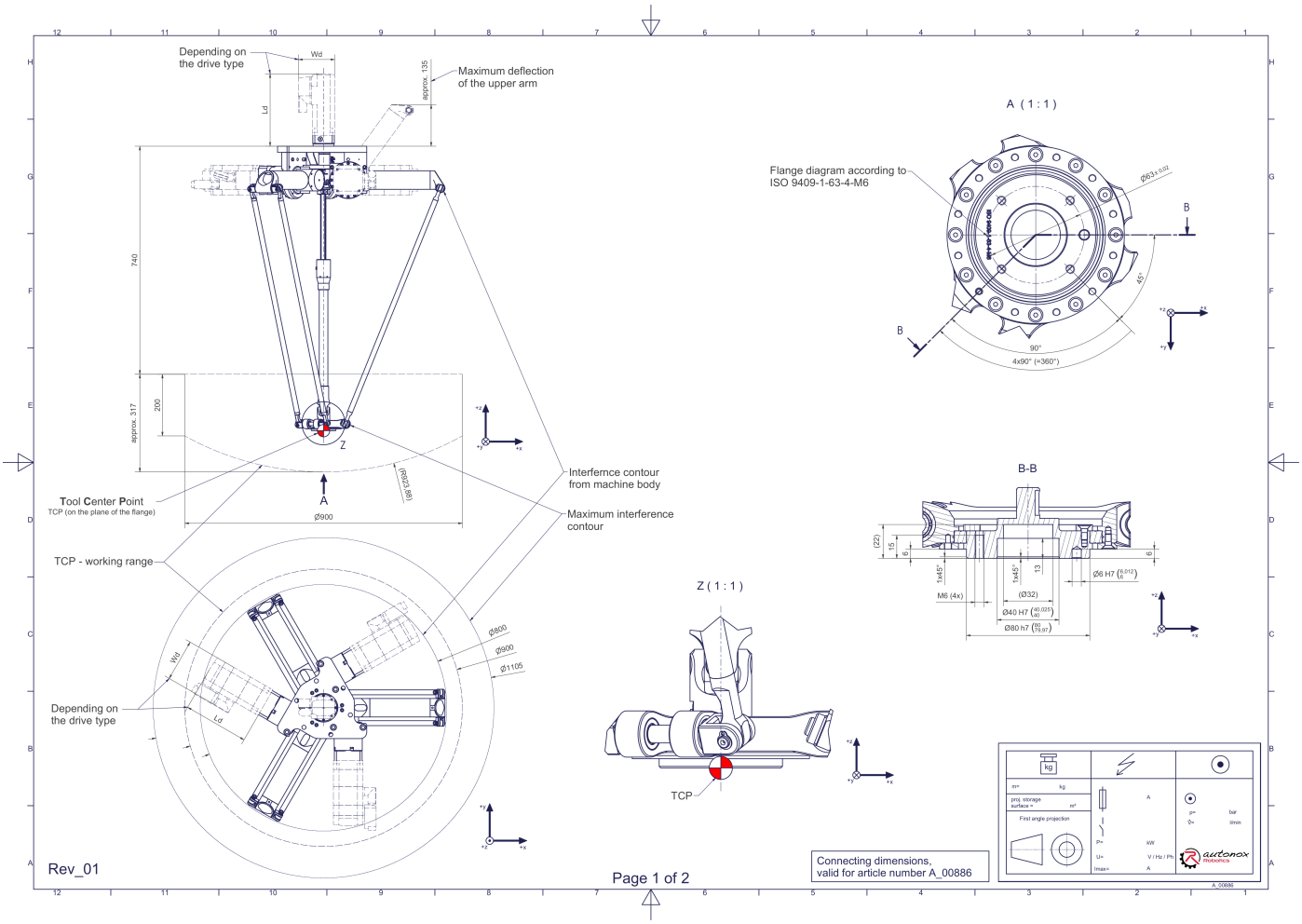

Downloads: Connecting dimensions (PDF) 3D model (STP) 3D model (PDF)

We refer to our General Terms of Sale and Supply and Terms of Use.

© 2026 autonox Robotics GmbH | www.autonox.com

Technical specifications:

Field of application	Standard (not hygienic)
Kinematics	Parallel
Translatory Degrees of Freedom (X,Y,Z)	3
Rotational Degrees of Freedom (α,ß,γ)	1
Nominal payload [kg|lbs] *	3 | 6.6
Working area-diameter [mm|in]	900 | 35.4
Working height outside [mm|in]	200 | 7.9
Working height center [mm|in]	317 | 12.5
Max. acceleration torque of the rotation γ around Z at the output [Nm|in.lbs]	26,8 | 237.2
Nominal torque of the rotation γ around Z at the output [Nm|in.lbs]	26,8 | 237.2
Max. speed of the rotation γ around Z at the output [1/min]	750
Nominal speed of the rotation γ around Z at the output [1/min]	400
Bearing type of the telescopic shaft(s)	Roller bearing
Bearing type of the arm joints	Roller bearing
Lubricants of the bearings	Food-grade (FO)
Lubricants of the gearboxes	Food-grade (FO)
Cleaning	No high pressure
Ambient temperature [°C|°F]	0 to +40 | +32 to +104
Relative humidity level [%]	95 (free of condensation)
Mounting position	Floor, Ceiling, Wall (on request), Angle (on request)

* All given values are nominal values (nominal payload referred to a nominal performance) and can vary under realworld conditions depending on the application (tool specifications, load distances, reduction (partly) of the nominal performance when using food-grade lubricants, ...). Please consider our technical data sheets regarding the load capacity.

We refer to our General Terms of Sale and Supply and Terms of Use.

© 2026 autonox Robotics GmbH | www.autonox.com