DELTA RLE4-860-1kg



Article number: A_00879-MV-FO

Mirror-inverted variant: Yes

Lubricant variant: Food-grade lubricants (FO)

Description:

This type of robot is based on the principle of parallel kinematics. All drives are mounted in a fixed position on the robot head. Motor cables are not moved. The robot has three (3) translational and one (1) rotational degree(s) of freedom. The article number extension 'MV' (Mirrored Version) identifies the mirrored version of the mechanic. **Scope of delivery**
Robot mechanics incl. gearbox, Servo motor adapter, Threaded protection caps , Transport and packing instructions

Connecting dimensions:

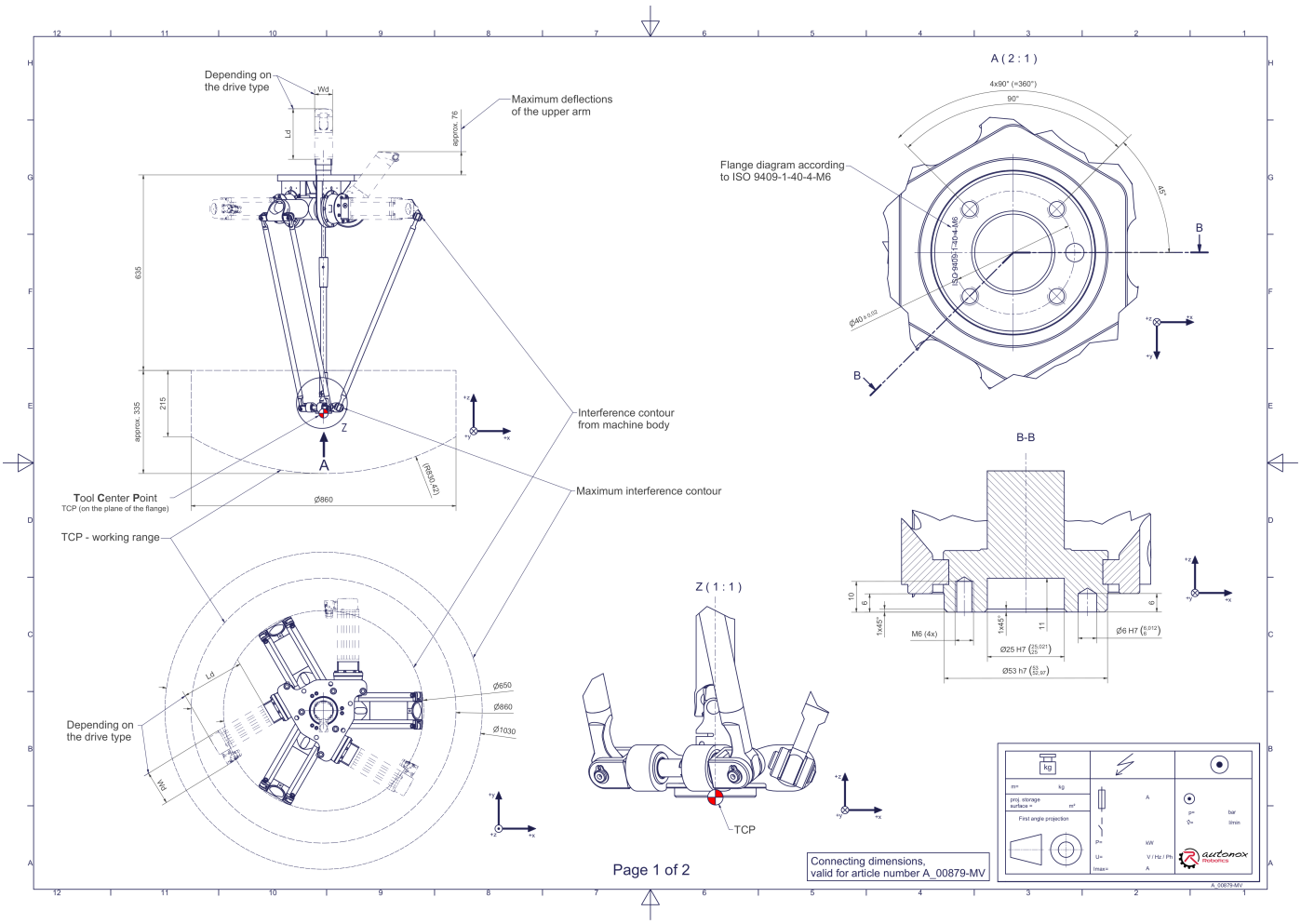

Downloads: Connecting dimensions (PDF) 3D model (STP) 3D model (PDF)

We refer to our General Terms of Sale and Supply and Terms of Use.

© 2026 autonox Robotics GmbH | www.autonox.com

Technical specifications:

Field of application	Standard (not hygienic)
Kinematics	Parallel
Translatory Degrees of Freedom (X,Y,Z)	3
Rotational Degrees of Freedom (α,ß,γ)	1
Nominal payload [kg|lbs] *	1 | 2.2
Working area-diameter [mm|in]	860 | 33.9
Working height outside [mm|in]	215 | 8.5
Working height center [mm|in]	335 | 13.2
Max. acceleration torque of the rotation γ around Z at the output [Nm|in.lbs]	7,2 | 63.7
Nominal torque of the rotation γ around Z at the output [Nm|in.lbs]	6 | 53.1
Max. speed of the rotation γ around Z at the output [1/min]	500
Nominal speed of the rotation γ around Z at the output [1/min]	460
Bearing type of the telescopic shaft(s)	Roller bearing
Bearing type of the arm joints	Roller bearing
Lubricants of the bearings	Food-grade (FO)
Lubricants of the gearboxes	Food-grade (FO)
Cleaning	No high pressure
Ambient temperature [°C|°F]	0 to +40 | +32 to +104
Relative humidity level [%]	95 (free of condensation)
Mounting position	Floor, Ceiling, Wall (on request), Angle (on request)
Robot weight without drive engineering (esp. motors) [kg|lbs]	24 | 52.9

* All given values are nominal values (nominal payload referred to a nominal performance) and can vary under realworld conditions depending on the application (tool specifications, load distances, reduction (partly) of the nominal performance when using food-grade lubricants, ...). Please consider our technical data sheets regarding the load capacity.

Gearbox article number for this robot mechanics:

Function	Article number	Document
Drive of the upper arms	MT_WST00108764-xx-FO	Operating manual gearbox type 3 (PDF)
Drive of the telescopic shaft for rotation γ around Z	MT_WST00109440-xx-FO	Operating manual gearbox type 1 (PDF)

We refer to our General Terms of Sale and Supply and Terms of Use.

© 2026 autonox Robotics GmbH | www.autonox.com