DELTA RLT5-1350-3kg



Article number: A_00871

Lubricant variant: Synthetic lubricants

Description:
This type of robot is based on the principle of parallel kinematics. All drives are mounted in a fixed position on the robot head. Motor cables are not moved. The robot has three (3) translational and two (2) rotational degrees of freedom.

Scope of delivery:
Robot mechanics incl. gearbox, Servo motor adapter, Threaded protection caps , Transport and packing instructions

Connecting dimensions:

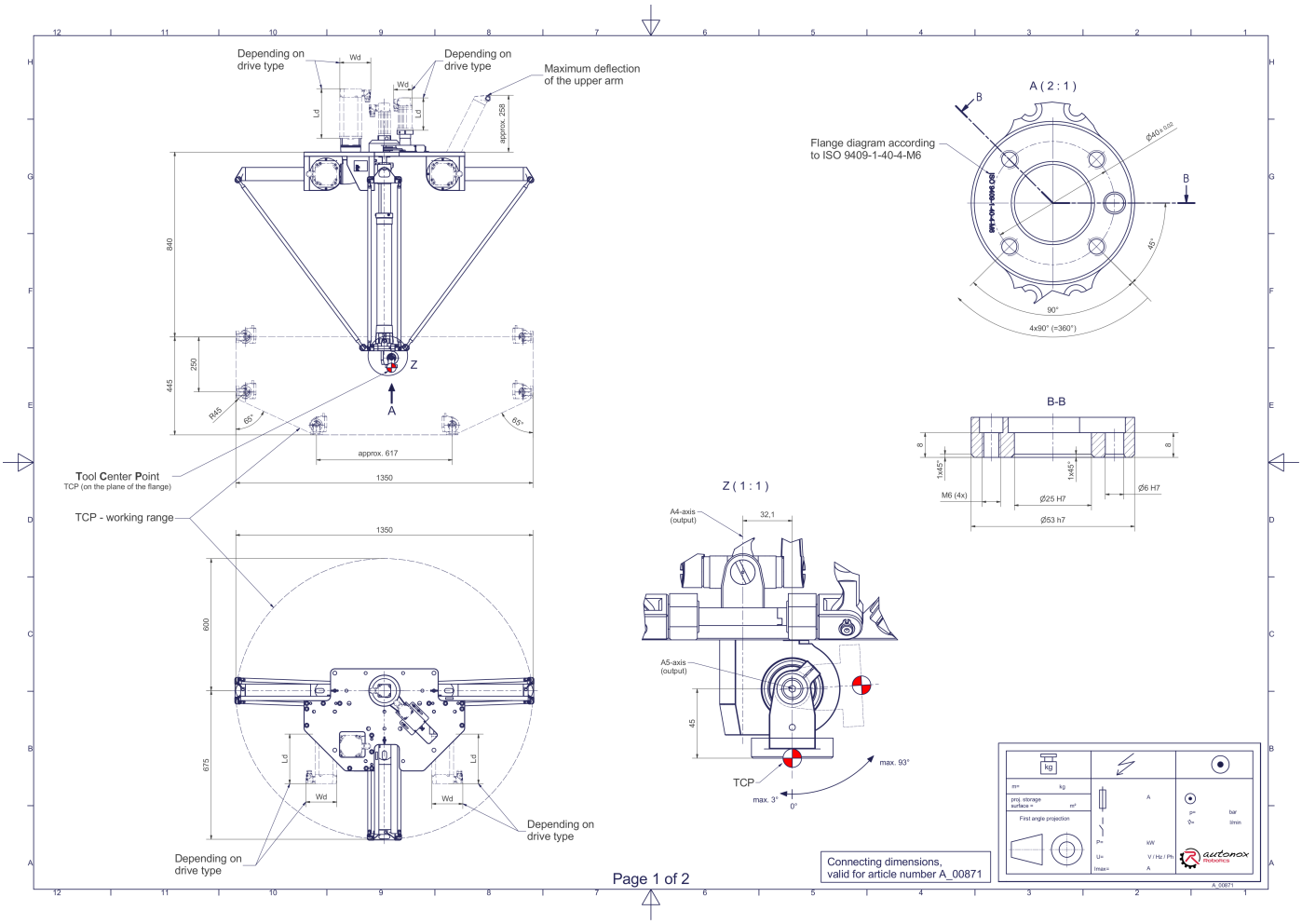

Downloads: Connecting dimensions (PDF) 3D model (STP) 3D model (PDF)

We refer to our General Terms of Sale and Supply and Terms of Use.

© 2026 autonox Robotics GmbH | www.autonox.com

Technical specifications:

Field of application	Standard (not hygienic)
Kinematics	Parallel
Translatory Degrees of Freedom (X,Y,Z)	3
Rotational Degrees of Freedom (α,ß,γ)	2
Nominal payload [kg|lbs] *	3 | 6.6
Working area-width X/Y [mm|in]	1275/1350 | 50.2/53.1
Working height outside [mm|in]	250 | 9.8
Working height center [mm|in]	445 | 17.5
Max. acceleration torque of the rotation α/β around X/Y at the output [Nm|in.lbs]	16 | 141.6
Nominal torque of the rotation α/β around X/Y at the output [Nm|in.lbs]	16 | 141.6
Max. speed of the rotation α/β around X/Y at the output [1/min]	82
Nominal speed of the rotation α/β around X/Y at the output [1/min]	82
Max. acceleration torque of the rotation γ around Z at the output [Nm|in.lbs]	24 | 212.4
Nominal torque of the rotation γ around Z at the output [Nm|in.lbs]	11,4 | 100.9
Max. speed of the rotation γ around Z at the output [1/min]	500
Nominal speed of the rotation γ around Z at the output [1/min]	320
Bearing type of the telescopic shaft(s)	Journal bearing, Roller bearing
Bearing type of the arm joints	Roller bearing
Lubricants of the gearboxes	Synthetic
Cleaning	No high pressure
Ambient temperature [°C|°F]	0 to +40 | +32 to +104
Relative humidity level [%]	95 (free of condensation)
Mounting position	Floor, Ceiling, Wall (on request), Angle (on request)

* All given values are nominal values (nominal payload referred to a nominal performance) and can vary under realworld conditions depending on the application (tool specifications, load distances, reduction (partly) of the nominal performance when using food-grade lubricants, ...). Please consider our technical data sheets regarding the load capacity.

We refer to our General Terms of Sale and Supply and Terms of Use.

© 2026 autonox Robotics GmbH | www.autonox.com