HHD DELTA RL4-1600-12kg

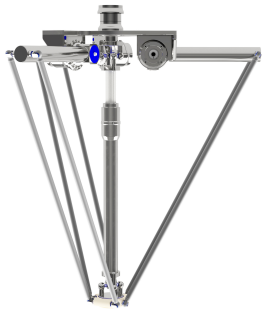

Article number: A_00853

Description:
This type of robot is based on the principle of parallel kinematics. All drives are mounted in a fixed position on the robot head. Motor cables are not moved. The robot has three (3) translational and one (1) rotational degree(s) of freedom.

Scope of delivery:
Robot mechanics incl. gearbox, Servo motor adapter, Transport and packing instructions

Connecting dimensions:

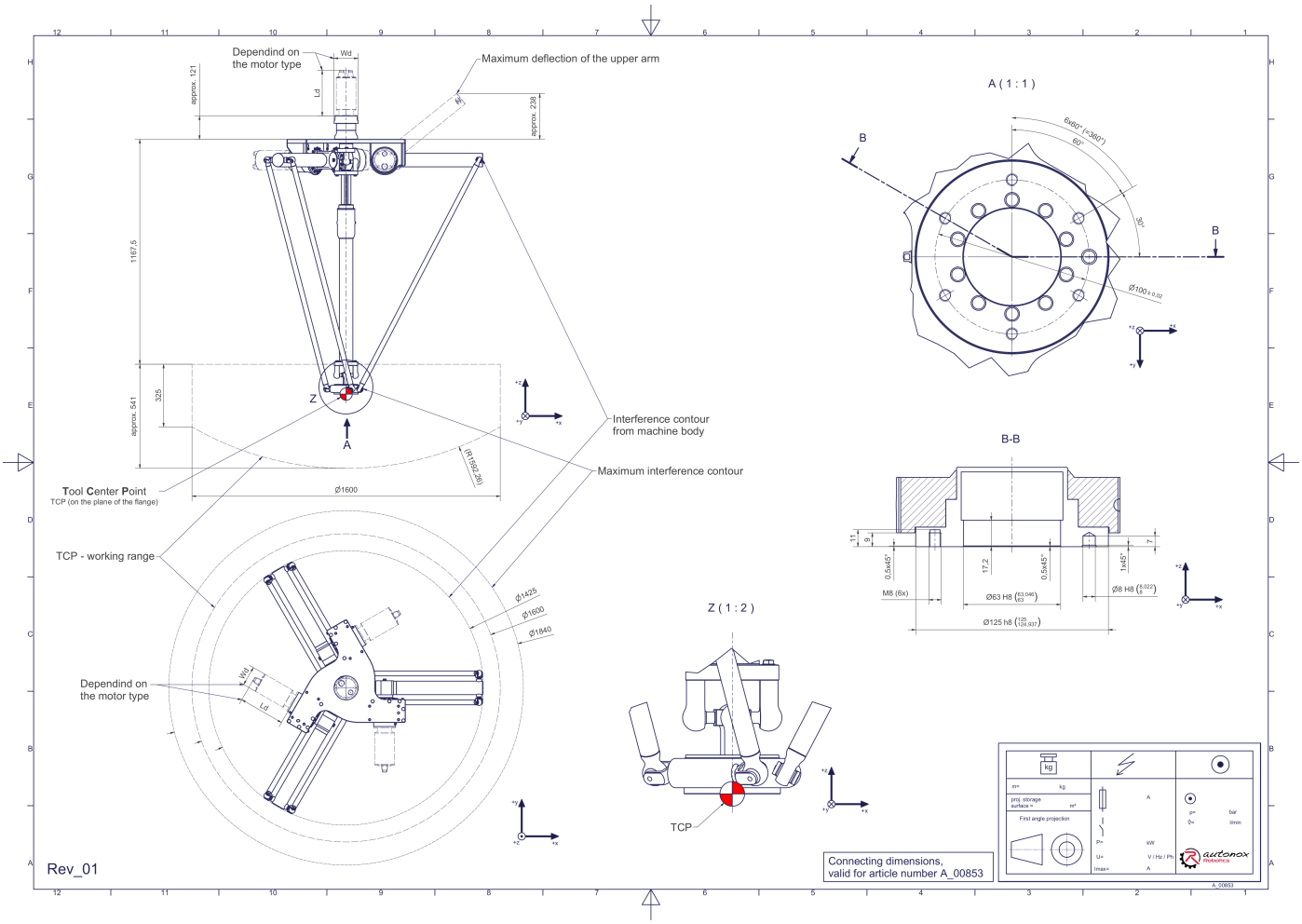

Downloads: Connecting dimensions (PDF) 3D model (STP) 3D model (PDF)

We refer to our General Terms of Sale and Supply and Terms of Use.

© 2026 autonox Robotics GmbH | www.autonox.com

Technical specifications:

Field of application	Hygienic 'HHD'
Kinematics	Parallel
Translatory Degrees of Freedom (X,Y,Z)	3
Rotational Degrees of Freedom (α,ß,γ)	1
Nominal payload [kg|lbs] *	12 | 26.5
Working area-diameter [mm|in]	1600 | 63.0
Working height outside [mm|in]	325 | 12.8
Working height center [mm|in]	541 | 21.3
Max. acceleration torque of the rotation γ around Z at the output [Nm|in.lbs]	110 | 973.6
Nominal torque of the rotation γ around Z at the output [Nm|in.lbs]	110 | 973.6
Max. speed of the rotation γ around Z at the output [1/min]	260
Nominal speed of the rotation γ around Z at the output [1/min]	160
Bearing type of the telescopic shaft(s)	Roller bearing
Bearing type of the arm joints	Roller bearing
Lubricants of the bearings	Food-grade (FO)
Lubricants of the gearboxes	Food-grade (FO)
Cleaning	Up to 28 bar | 406 psi high pressure
Protection class	IP69K
Ambient temperature [°C|°F]	0 to +40 | +32 to +104
Relative humidity level [%]	95 (free of condensation)
Mounting position	Ceiling, Wall (on request), Angle (on request)
Robot weight without drive engineering (esp. motors) [kg|lbs]	132 | 291.0
Special features	With stainless steel gearboxes (food-grade lubricants, but therefore reduced performance). To maintain the Hygienic Design requirements, we recommend the use of appropriate stainless steel motors.

* All given values are nominal values (nominal payload referred to a nominal performance) and can vary under realworld conditions depending on the application (tool specifications, load distances, reduction (partly) of the nominal performance when using food-grade lubricants, ...). Please consider our technical data sheets regarding the load capacity.

Gearbox article number for this robot mechanics:

Function	Article number	Document
Drive of the upper arms	MT_WST00105111-xx-FO	Operating manual gearbox type 3 (PDF)
Drive of the telescopic shaft for rotation γ around Z	MT_WST00105131-xx-FO	Operating manual gearbox type 3 (PDF)

We refer to our General Terms of Sale and Supply and Terms of Use.

© 2026 autonox Robotics GmbH | www.autonox.com