DELTA RL4-T1-2000-20kg

Article number: A_00846-T1

Lubricant variant: Synthetic lubricants



Description:

This type of robot is based on the principle of parallel kinematics. All drives are mounted in a fixed position on the robot head. Motor cables are not moved. The robot has three (3) translational and one (1) rotational degree(s) of freedom. **Scope of delivery**
Robot mechanics incl. gearbox, Servo motor adapter, Threaded protection caps , Transport and packing instructions

Connecting dimensions:

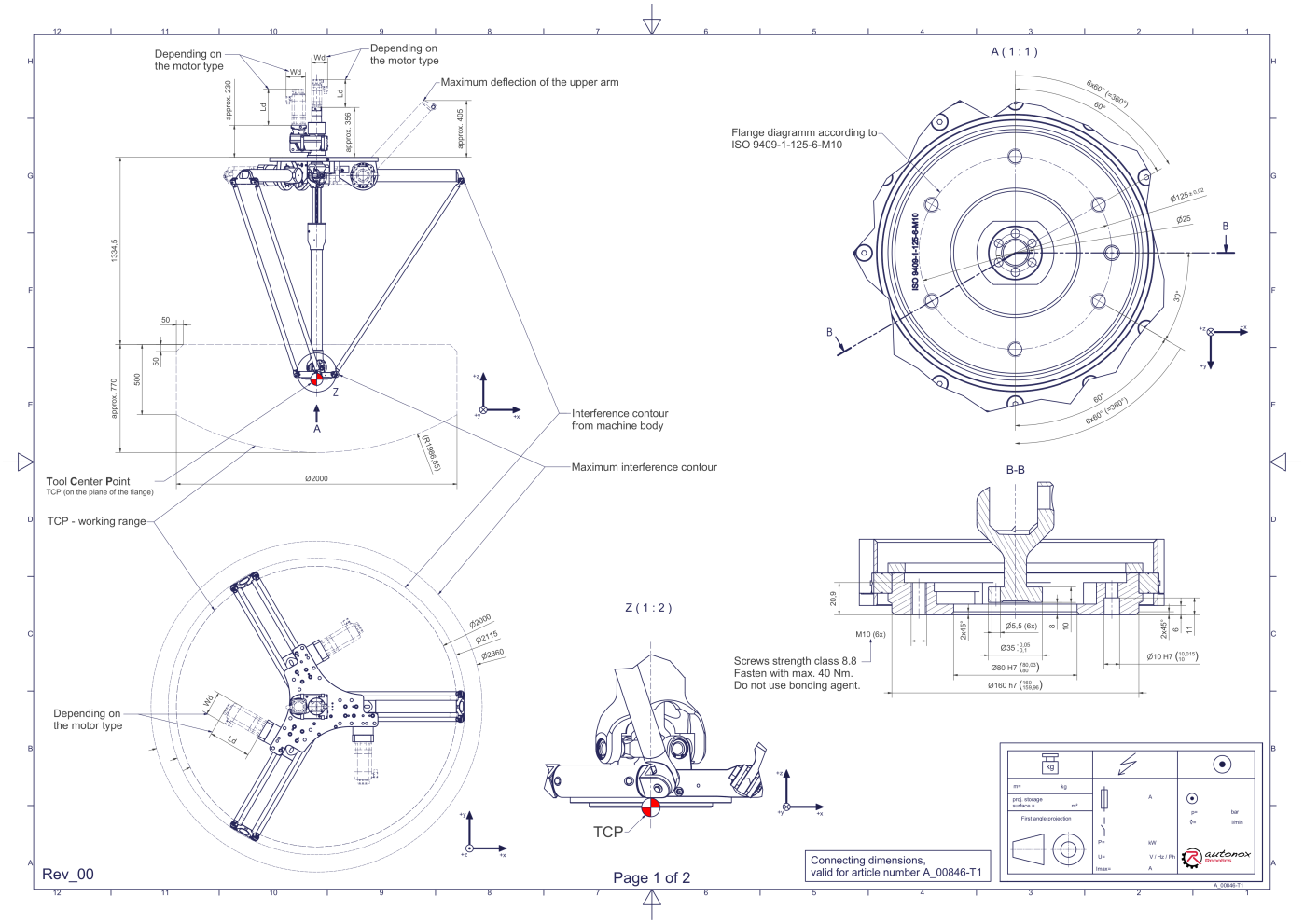

Downloads: Connecting dimensions (PDF) 3D model (STP) 3D model (PDF)

We refer to our General Terms of Sale and Supply and Terms of Use.

© 2026 autonox Robotics GmbH | www.autonox.com

Technical specifications:

Field of application	Standard (not hygienic)
Kinematics	Parallel
Translatory Degrees of Freedom (X,Y,Z)	3
Rotational Degrees of Freedom (α,ß,γ)	1
Nominal payload [kg|lbs] *	20 | 44.1
Working area-diameter [mm|in]	2000 | 78.7
Working height outside [mm|in]	500 | 19.7
Working height center [mm|in]	770 | 30.3
Output type of the tool actuation	Flange (T)
Number of the tool actuation (telescopic shaft(s))	1
Max. acceleration torque of the rotation γ around Z at the output [Nm|in.lbs]	240 | 2124.2
Nominal torque of the rotation γ around Z at the output [Nm|in.lbs]	240 | 2124.2
Max. speed of the rotation γ around Z at the output [1/min]	153
Nominal speed of the rotation γ around Z at the output [1/min]	48
Max. acceleration torque of the tool actuation T/TS1 at the output [Nm|in.lbs]	40 | 354.0
Nominal torque of the tool actuation T/TS1 at the output [Nm|in.lbs]	21 | 185.9
Max. speed of the tool actuation T/TS1 at the output [1/min]	286
Nominal speed of the tool actuation T/TS1 at the output [1/min]	123
Bearing type of the telescopic shaft(s)	Roller bearing
Bearing type of the arm joints	Roller bearing
Lubricants of the gearboxes	Synthetic
Cleaning	No high pressure
Ambient temperature [°C|°F]	0 to +40 | +32 to +104
Relative humidity level [%]	95 (free of condensation)
Mounting position	Floor, Ceiling, Wall (on request), Angle (on request)
Robot weight without drive engineering (esp. motors) [kg|lbs]	162 | 357.1

* All given values are nominal values (nominal payload referred to a nominal performance) and can vary under realworld conditions depending on the application (tool specifications, load distances, reduction (partly) of the nominal performance when using food-grade lubricants, ...). Please consider our technical data sheets regarding the load capacity.

We refer to our General Terms of Sale and Supply and Terms of Use.

© 2026 autonox Robotics GmbH | www.autonox.com

Gearbox article number for this robot mechanics:

Function	Article number	Document
Drive of the upper arms	MT_BGR00105607-xx	Operating manual gearbox type 3 (PDF)
Drive of the telescopic shaft for rotation y around Z	MT_WST00113186-xx-FO	Operating manual gearbox type 7 (PDF)
Drive of the telescopic shaft for tool actuation T/TS1	MT_WST00113620-xx	Operating manual gearbox type 1 (PDF)

We refer to our General Terms of Sale and Supply and Terms of Use.

© 2026 autonox Robotics GmbH | www.autonox.com