DELTA RLE3-900-1kg



Article number: A_00655-FO

Lubricant variant: Food-grade lubricants (FO)

Description:
This type of robot is based on the principle of parallel kinematics. All drives are mounted in a fixed position on the robot head. Motor cables are not moved. The robot has three (3) translational degrees of freedom.

Scope of delivery:
Robot mechanics incl. gearbox, Servo motor adapter, Threaded protection caps , Transport and packing instructions

Connecting dimensions:

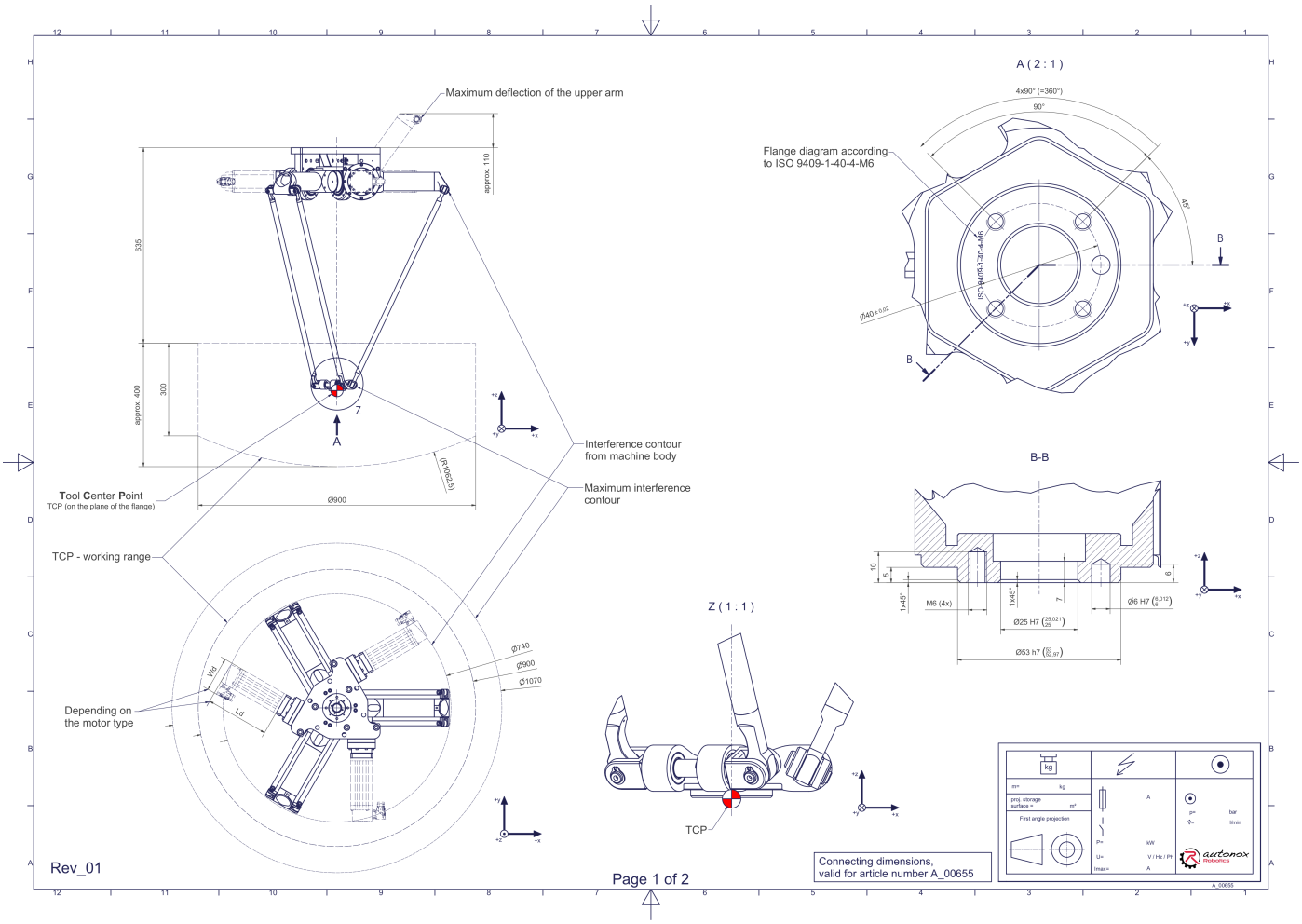

Downloads: Connecting dimensions (PDF) 3D model (STP) 3D model (PDF)

We refer to our General Terms of Sale and Supply and Terms of Use.

© 2026 autonox Robotics GmbH | www.autonox.com

Technical specifications:

Field of application	Standard (not hygienic)
Kinematics	Parallel
Translatory Degrees of Freedom (X,Y,Z)	3
Rotational Degrees of Freedom (α,ß,γ)	0
Nominal payload [kg|lbs] *	1 | 2.2
Working area-diameter [mm|in]	900 | 35.4
Working height outside [mm|in]	300 | 11.8
Working height center [mm|in]	400 | 15.7
Bearing type of the arm joints	Roller bearing
Lubricants of the bearings	Food-grade (FO)
Lubricants of the gearboxes	Food-grade (FO)
Cleaning	No high pressure
Ambient temperature [°C|°F]	0 to +40 | +32 to +104
Relative humidity level [%]	95 (free of condensation)
Mounting position	Floor, Ceiling, Wall (on request), Angle (on request)
Robot weight without drive engineering (esp. motors) [kg|lbs]	22 | 48.5

* All given values are nominal values (nominal payload referred to a nominal performance) and can vary under realworld conditions depending on the application (tool specifications, load distances, reduction (partly) of the nominal performance when using food-grade lubricants, ...). Please consider our technical data sheets regarding the load capacity.

Gearbox article number for this robot mechanics:

Function	Article number	Document
Drive of the upper arms	MT_WST00108764-xx-FO	Operating manual gearbox type 3 (PDF)

We refer to our General Terms of Sale and Supply and Terms of Use.

© 2026 autonox Robotics GmbH | www.autonox.com