ARTICULATED articc3-1015-15kg



Article number: AT_00017

Lubricant variant: Synthetic lubricants

Description :
This type of robot is based on the principle of serial kinematics. All drives and motor cables, except the stationary axis 1, are moved along. The robot has two (2) translational and one (1) rotational degree(s) of freedom.

Scope of delivery:
Robot mechanics incl. gearbox, Free installation of drive technology provided (including incoming goods inspection), Multi-hour, logged test run as final quality inspection, Threaded protection caps , Transport and packing instructions

Required accessories:
Set of parts for installing the drive technology. This set consists of, for example, a servo motor adapter, servo motor cable, transmission input pinion, plug board (usually on the base frame).

Connecting dimensions:

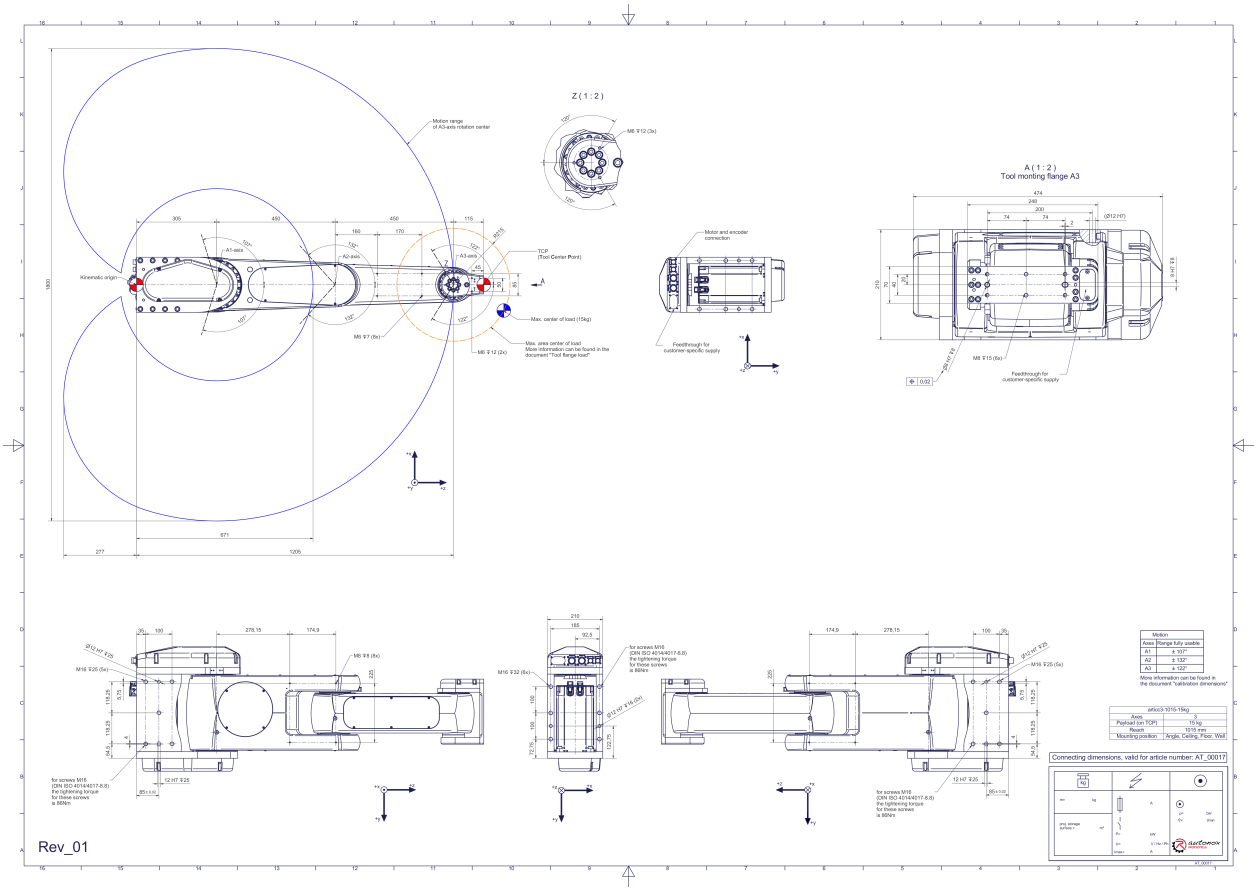

Downloads: Connecting dimensions (PDF) 3D model (STP) 3D model (PDF)

We refer to our General Terms of Sale and Supply and Terms of Use.

© 2026 autonox Robotics GmbH | www.autonox.com

Technical specifications:

Field of application	Standard (not hygienic)
Kinematics	Serial
Translatory Degrees of Freedom (X,Y,Z)	2
Rotational Degrees of Freedom (α,ß,γ)	1
Nominal payload [kg|lbs] *	15 | 33.1
Working area-reach [mm|in]	1015 | 40.0
Lubricants of the bearings	Synthetic
Lubricants of the gearboxes	Synthetic
Integrated media supply to the end effector possible	Yes
Cleaning	No high pressure
Protection class	IP64
Ambient temperature [°C|°F]	0 to +40 | +32 to +104
Relative humidity level [%]	95 (free of condensation)
Mounting position	Floor, Ceiling, Wall, Angle
Robot weight without drive engineering (esp. motors) [kg|lbs]	60 | 132.3

* All given values are nominal values (nominal payload referred to a nominal performance) and can vary under realworld conditions depending on the application (tool specifications, load distances, reduction (partly) of the nominal performance when using food-grade lubricants, ...). Please consider our technical data sheets regarding the load capacity.

We refer to our General Terms of Sale and Supply and Terms of Use.

© 2026 autonox Robotics GmbH | www.autonox.com